Building Guide

Colorado Chapter of the International Code Council

Single Family Residential Basement Finish

How to Use this Guide

Provide two sets of plans, drawn to scale and complete the following (*hint: use graph paper with ¼" squares. Example: ¼" = 1'*):

1. Review this Building Guide

2. Provide 2 Floor Plans

3. Fill out a Building Permit Application

The majority of permit applications are processed with little delay. The submitted documents will help determine if the project is in compliance with building safety codes, zoning ordinances and other applicable laws.

Smoke alarms and carbon monoxide alarms are required.

The Colorado Chapter of the International Code Council is a professional organization seeking to promote the public health, safety and welfare to building construction. We appreciate your feedback and suggestions. To obtain a master copy of this building guide, please write to the Colorado Chapter of the International Code Council, P.O. Box 961, Arvada, CO 80001.
http://www.coloradochaptericc.org

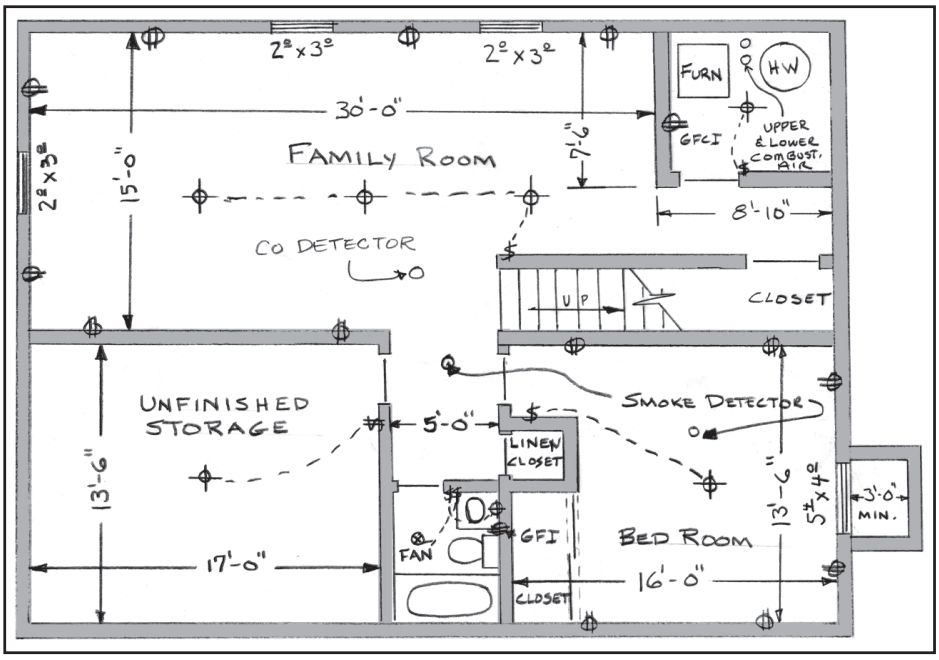

This handout was developed by the Colorado Chapter of the International Code Council as a basic plan submittal under the 2009 International Residential Code. It is not intended to cover all circumstances. Check with your Department of Building Safety for additional requirements.

Jefferson County Division of Building Safety
100 Jefferson County Parkway
Golden, Colorado 80419-3540
http://building.jeffco.us
303-271-8260

Single Family Residential Basement Finish

Directions

1. Submit two complete sets of required information.
2. Draw a floor plan with dimensions drawn to scale, showing the layout of the entire basement. Label the use for all of the rooms.
3. Show electrical outlets, smoke detectors, carbon monoxide alarms, lighting, fans, plumbing modifications, cleanouts, furnace, and water heater.
4. List window sizes and types, identify emergency escape and rescue windows, and egress window wells with ladder and clear dimensions of window well.
5. Identify modifications to the existing structure such as posts, beams and floor joists.
6. Indicate height of dropped ceiling areas less than 7 feet.
7. A shower or tub equipped with a showerhead shall have a minimum ceiling height of 6‘ 8” above a minimum area 30” by 30” at the showerhead. See Exception 2, P2708.1.
8. Show clearance around the tub and fixtures.
9. Show insulation values

Basement Finish Requirements

1. Ceiling Heights:
If the finished ceiling will be less than 7', please consult your Building Department.

2. Emergency Escapes:
All basements and sleeping rooms must have an emergency escape window or exterior door. Emergency escape windows with a sill height below grade must be provided with an emergency escape window well and ladder. (For emergency escape window and window well requirements, see page 3.)

3. Smoke Alarms:
Smoke alarms are required in all basements. If the finished basement contains a sleeping room, a smoke alarm must be installed on the ceiling or wall in the sleeping room and in the hallway or area immediately outside of the sleeping room. Smoke alarms added to satisfy the above requirements must be hard-wired with battery backup, and interconnected with existing smoke alarms. Smoke alarms are required to be hardwired and interconnected in new and existing bedrooms, halls and on each level unless removal of interior wall or ceiling finishes would be required. In this case, battery operated devices are acceptable.

4. Carbon Monoxide Alarms:
Carbon Monoxide alarms are required on each floor with bedrooms. They are recommended to be located no farther than 15 ft. from any bedroom entrance. Do not install within 15 ft. of a fuel burning appliances. Follow manufacture’s recommendations for location testing and replacement.

5. Fuel Burning Appliances:
Furnaces and water heaters cannot be located in a bedroom or bathroom unless appliances are installed in a dedicated enclosure in which all combustion air is taken directly from outdoors, and a weather stripped solid door equipped with an approved self closing device is installed. If the furnace and water heater are being enclosed, adequate combustion air must be provided for these appliances to operate properly. For maintenance purposes, a minimum of 30 inches clear working space must be provided in front of furnaces and water heaters. Maintenance or removal of each appliance must be possible without removing the other or disturbing walls, piping, valves, wiring and junction boxes.

6. Floated Walls:
In areas subject to floor heaving, non-bearing walls on basement floor slabs should be built to accommodate not less than 1-1/2 inches of floor movement. A detail of a typical floated wall is included on Page 3 of this hand-out.

7. Fireblocking:
Fireblocking must be installed in concealed spaces of wood-furred walls at the ceiling level, at 10-foot intervals along the length of the wall and at all interconnections of concealed vertical and horizontal spaces such as intersection of stud walls and soffits or dropped ceilings. A detail of typical fireblocking is included on the following page of this handout. Fireblocks may be constructed of 1-1/2 inch lumber, 3/4 inch plywood or particle board, 1/2 inch gypsum board or fiberglass insulation 16 inches minimum in height, securely fastened.

8. Insulation:
Check with your Building Department for insulation requirements.

9. Space Under Stairs:
If access to the area or space under the basement stairs is provided for storage or other uses, the walls and ceiling of this enclosed space must be protected on the inside with1/2 inch gypsum board.

10. Bathrooms:
Toilets must be provided with a minimum of 21 inches in front of the toilet and 15 inches from the center of the toilet and any sidewall or other obstruction. Showers shall have a minimum inside dimension of 900 square inches, capable of encompassing a 30 inch circle and be finished 72 inches above the floor with non-absorbent materials. See Exception 2, P2708.1.

A ventilation fan is required in toilet rooms and bathrooms with unopenable windows. The fan must be vented to the exterior of the building and not to terminate within 3 feet of an opening.

11. Lighting & Ventilation:
Lighting and ventilation are required for any finished portion of the basement. Contact your Building Department for specific requirements.

The Building Department staff can help you determine what is necessary to meet minimum safety requirements.

This handout was developed by the Colorado Chapter of the International Code Council as a basic plan submittal under the 2009 International Residential Code. It is not intended to cover all circumstances. Check with your Department of Building Safety for additional requirements.

Jefferson County Division of Building Safety
100 Jefferson County Parkway
Golden, Colorado 80419-3540
http://building.jeffco.us
303-271-8260

Single Family Residential Basement Finish

Basement Finish Details

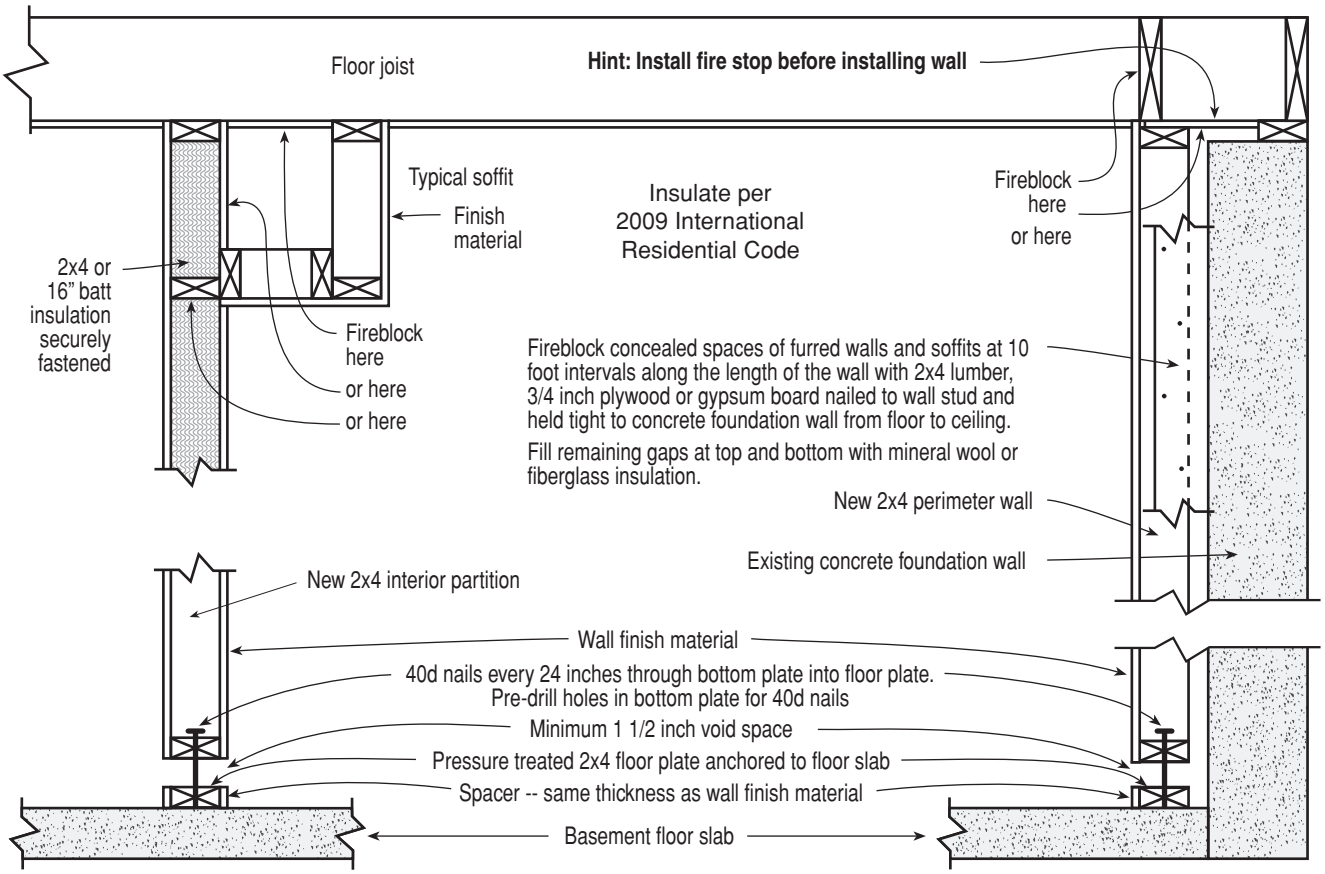

Emergency Escape & Rescue Window Well

Emergency Escape And Rescue window wells must provide a minimum area of 9 square feet with a minimum dimension of 36 inches and shall enable the window to open fully. If the depth of the window well exceeds 44 inches, a permanently affixed ladder must be provided. The ladder must not interfere with the operation of the window.

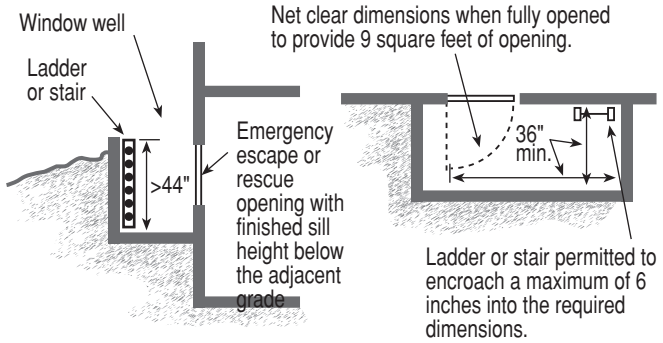

Emergency Escape & Rescue Window

Emergency Escape And Rescue Windows must meet the following criteria:

- A minimum total openable area of not less than 5.7 square feet
- A minimum clear openable height of not less than 24 inches
- A minimum clear openable width of not less than 20 inches.
- A finished sill height of not more than 44 inches above the floor and the window should be openable from the inside with normal operation and without the use of tools, keys or effort.

Examples of Complying Height & Width Combinations

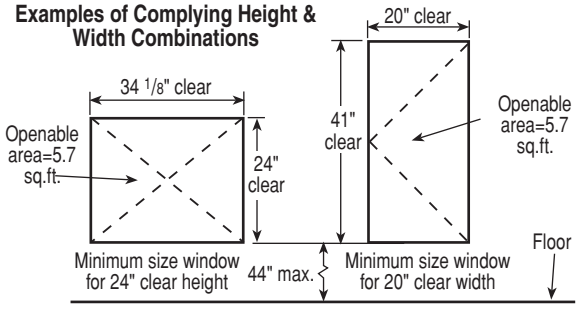

This handout was developed by the Colorado Chapter of the International Code Council as a basic plan submittal under the 2009 International Residential Code. It is not intended to cover all circumstances. Check with your Department of Building Safety for additional requirements.

Jefferson County Division of Building Safety
100 Jefferson County Parkway
Golden, Colorado 80419-3540
http://building.jeffco.us
303-271-8260