DESIGN & TECHNICAL CRITERIA

STORM DRAINAGE

JEFFERSON COUNTY, COLORADO PLANNING & ZONING DIVISION

Storm Drainage Design & Technical Criteria

Acknowledgements

Preparation of this document involved the efforts of
Planning and Zoning and Transportation and Engineering.

Revision Dates

The Storm Drainage Design and Technical Criteria was prepared by WRC Engineering, Inc. in May 1987 and was adopted by the Board of County Commissioners of Jefferson County, Colorado, and has since been amended on the following dates:

March 19, 1996

May 12, 1998

May 27, 2003

November 25, 2003

October 1, 2013 (Temporary Regulation Amendment)

April 1 2014

November 24, 2015

Jefferson County Planning and Zoning Division
100 Jefferson County Parkway, Suite 3550, Golden, Colorado 80419
303-271-8700 • http://planning.jeffco.us

Table of Contents

Page 7 1 General Provisions
1.1 Short Title
1.2 Jurisdiction
1.3 Purpose and Effect
1.4 Enactment Authority
1.5 Amendment and Revisions
1.6 Enforcement Responsibility
1.7 Review and Approval
1.8 Waivers
1.9 Interpretation
1.10 Relationship to Other Standards
1.11 Abbreviations

9 2 Drainage Planning Submittal Requirements
2.1 Introduction
2.2 Phase I Drainage Report
2.2.1 Phase I Report Contents
2.2.2 Phase I Drawing Contents
2.3 Phase II Drainage Report
2.4 Phase III Drainage Report
2.4.1 Phase II and Phase III Report Contents
2.4.2 Phase II and Phase III Drawing Contents
2.5 Abridged Drainage Report
2.6 Exception to The Requirement for a Drainage Report
2.7 Construction Plans
2.8 As-Built Drawings and Final Acceptance Certificate

18 3 Drainage Policy
3.1 Introduction
3.2 Basic Principles
3.2.1 Multi-Purpose Resource
3.2.2 Water Rights
3.2.3 Major Drainageway
3.3 Regional and Local Planning
3.3.1 Post Development Flow Conditions
3.3.2 Master Planning
3.3.3 Drainage Problem Areas
3.3.4 Public Improvements
3.3.5 Basin Transfer
3.3.6 Storm Runoff Detention
3.3.7 Stormwater Quality
3.3.8 Floodplain Management
3.3.9 Operations and Maintenance
3.3.10 Drainage Easement Requirements
3.3.11 Storage Facilities
3.3.12 Inadvertent Detention Storage
3.4 Planning and Design
3.4.1 Minor and Major Drainage System
3.4.2 Storm Runoff
3.4.3 Streets
3.4.4 Floodproofing Existing Structures

24 4 Floodplain Regulations
4.1 Introduction

24 5 Rainfall
5.1 Introduction
5.2 Jefferson County Rainfall Zones
5.2.1 Description of the Zones
5.2.2 Selecting the Rainfall Zone
5.3 Colorado Urban Hydrograph Procedure Design Storms
5.4 Time-Intensity-Frequency Curves

Page 33 6 Runoff
6.1 Introduction
6.2 Rational Method
6.3 Colorado Urban Hydrograph Procedure
6.4 Storm Flow Analysis
6.4.1 On-site Flow Analysis
6.4.2 Off-site Flow Analysis
6.4.2.1 Tributary Area Within a Major Drainageway Basin
6.4.2.2 Tributary Area Not Within a Major Drainageway Basin

34 7 Open Channels
7.1 Introduction
7.2 Channel Types
7.2.1 Natural Channels
7.2.2 Grass Lined Channels
7.2.3 Composite Channels
7.2.4 Bioengineered Channels
7.2.5 Concrete Lined Channels
7.2.6 Rock Lined Channels
7.3 Flow Computation
7.4 Design Standards for Major Drainageways
7.4.1 Natural Channels
7.4.2 Grass Lined Channels
7.5 Design Standards for Small Drainageways
7.5.1 Natural Channels
7.5.2 Grass Lined Channels
7.5.3 Concrete Lined Channels
7.5.4 Riprap Lined Channels
7.6 Street/Roadside Ditches
7.7 Channel Rundowns
7.8.1 Cross-Sections
7.8.2 Design Flow
7.8.3 Flow Depth
7.8.4 Outlet Configuration

47 8 Storm Sewers
8.1 Introduction
8.2 Construction Materials
8.3 Hydraulic Design
8.3.1 Pipe Friction Losses
8.3.2 Pipe Form Losses
8.3.3 Storm Sewer Outlets
8.3.4 Partially Full Pipe Flow
8.4 Vertical Alignment
8.5 Horizontal Alignment
8.6 Pipe Size
8.7 Manholes
8.8 Checklist

55 9 Storm Sewer Inlets
9.1 Introduction
9.2 Standard Inlets
9.3 Inlet Hydraulics
9.4 Inlet Spacing
9.5 Inlet Capacity

57 10 Streets/Roads
10.1 Introductions
10.2 Function of Streets in the Drainage System
10.3 The Allowable use of Streets/Roads as a Drainage System
10.4 Hydraulic Evaluation
10.4.1 Allowable Gutter Capacity
10.4.2 Street/Road with Roadside Ditches

Page 59 11 Culverts
11.1 Introduction
11.2 Culvert Hydraulics
11.3 Culvert Design Standards
11.3.1 Construction Material and Pipe Size
11.3.2 Inlet and Outlet Configuration
11.3.3 Hydraulic Data
11.3.4 Velocity Considerations
11.3.5 Headwater Considerations
11.3.6 Cross Culvert Location
11.3.7 Structural Design
11.3.8 Trashracks
11.4 Design Example
11.5 Culvert Sizing Criteria
11.6 Checklist

65 12 Hydraulic Structures
12.1 Introduction
12.2 Conduit Outlet Structures
12.3 Channel Grade Control Structures (Check And Drop Structures)
12.4 Bridges
12.5 Irrigation Ditch Crossings

65 13 Storm Water Quality Management Control
13.1 Introduction
13.2 Temporary Erosion Control for Construction Activities
13.3 Permanent Controls for Storm Water Quality Management
13.3.1 Objectives for Permanent Storm Water Quality Control
13.3.2 Best Management Practices for Permanent Control
13.3.3 Minimum Design Criteria

68 14 Detention
14.1 Introduction
14.2 Detention Methods
14.3 Design Criteria
14.3.1 Volume and Release Rates
14.3.2 Design Frequency
14.3.3 Hydraulic Design
14.4 Design Standards for Open Space Detention
14.4.1 State Engineer's Office
14.4.2 Grading Requirements
14.4.3 Retaining Walls
14.4.4 Freeboard Requirements
14.4.5 Trickle Flow Control
14.4.6 Outlet Configuration
14.4.7 Embankment Protection
14.4.8 Vegetation Requirements
14.5 Design Standards for MPLD
14.6 Design Standards for Parking Lot Detention
14.6.1 Depth Limitation
14.6.2 Freeboard Requirements
14.6.3 Overflow Requirements
14.6.4 Outlet Configuration
14.6.5 Performance
14.6.6 Flood Hazard Warning
14.6.7 EURV
14.7 Design Standards for Underground Detention
14.7.1 Materials
14.7.2 Configuration
14.7.3 Overflow Requirements
14.7.4 Inlet and Outlet Design
14.7.5 EURV
14.7.6 Maintenance Access
14.8 Design Standards For Combined Detention Ponds
14.9 Design Examples

Page 82 Appendix
Checklist
Standard Forms
Standard Details

List of Tables

201 Drawing Symbol Criteria and Hydrology Review
501 Design Point Rainfall Values
502 CUHP Design Storms for Jefferson County (A-D)
503 Time-Intensity-Frequency Tabulation
701 Street/Roadside Ditch Capacities
801 Storm Sewer Alignment and Size Criteria
802 Energy Loss Coefficient Bends at Manholes
803 Manhole and Junction Losses
901 Standard Inlets
1001 Allowable Use of Streets/Roads for Minor Storm Runoff
1002 Allowable Use of Streets/Roads for Major Storm Runoff
1003 Allowable Flow Depths for Standard Street Templates
1004 Allowable Cross Street Flow
1005 Allowable Culvert Overtopping
1101 Hydraulic Data for Culverts
1102 Culvert Rating Example
1301 Possible Sources of Pollutants in Storm Water
1401 Weir Flow Coefficients

List Of Figures

501 Rainfall Zones
502 Time-Intensity-Frequency Curves (A-D)
701 Roughness Coefficient for Grassed Channels
702 Street/Roadside Ditch Sections
703 Trickle Channel Details
704 Channel Rundown Details
801 Hydraulic Properties Circular Pipe
802 Hydraulic Properties Horizontal Elliptical Pipe
803 Hydraulic Properties Arch Pipe
901 Inlet Design Example - Minor Storm
1401 Detention Pond Outlet Configurations
1402 Detention Pond Details
1403 Weir Design Example
1404 Outlet Design Example
1405 Underground Detention
1406 Pond Forebay with Dissipator
1407 Embankment Protection Details and Rock Sizing Chart
1408 Mountain Porous Landscape Design

Chapter 1 - General Provisions

1.1 Short Title

These regulations together with all future amendments will be known as the "Jefferson County Storm Drainage Design and Technical Criteria" (hereafter called ***Criteria***) as referenced in the Jefferson County Land Development Regulation (hereafter called ***Regulation)***.

1.2 Jurisdiction

These ***Criteria*** will apply to all land within the unincorporated areas of the County, including any public lands. These ***Criteria*** will apply to all facilities constructed on County ROW, easements dedicated for public use, and to all privately owned and maintained drainage facilities, including but not limited to detention ponds, water quality facilities, storm sewers, inlets, manholes, culverts, swales and channels.

1.3 Purpose And Effect

Presented in these ***Criteria*** are the minimum design and technical criteria for the analysis and design of storm drainage facilities. All subdivisions, rural clusters, rezonings, site development plans, site approvals, land disturbance permits or any other proposed development or construction submitted for approval under the provisions of the ***Regulation*** will include adequate storm drainage system analysis and appropriate drainage system design. Such analysis and design will meet or exceed the criteria set forth herein. Options to the provisions of these ***Criteria*** may be suggested by the applicant. The applicant will have the burden of showing that the options are equal or better. Policies and technical criteria not specifically addressed in these ***Criteria*** will follow the provisions of the Urban Drainage and Flood Control District (hereafter called UD&FCD) "Urban Storm Drainage ***Criteria Manual***" (hereafter called ***Manual***). The applicant is also referred to the Colorado Department of Transportation Standard Plans for additional design details not covered in these ***Criteria*** or the ***Manual***. Drainage facilities in place or under construction at the time of ***Criteria*** adoption will be accepted without regard to the provisions of these ***Criteria***.

1.4 Enactment Authority

The ***Regulation*** has been adopted pursuant to the authority conferred within: Article 28 of Title 30 (County Planning); Article 2 of Title 43 (State, County and City Highway Systems); Article 20 of Title 29 (Land Use Control and Conservation); and other applicable sections of the CRS, as amended. As part of the authority provided by which the County promulgates the ***Regulation***, these ***Criteria*** are adopted by resolution.

The ***Regulation*** refers to these ***Criteria*** being the source of County policy, guidelines, criteria and submittal requirements for storm water management issues during the development process.

1.5 Amendment and Revisions

These policies and criteria may be amended as new technology is developed and/or if experience gained in the use of these ***Criteria*** indicates a need for revision. Amendments and revisions will be made by resolution.

1.6 Enforcement Responsibility

It will be the duty of the Board of County Commissioners acting through Planning and Zoning to enforce the provisions of these ***Criteria***.

1.7 Review and Approval

The County will review all drainage submittals for general compliance with these ***Criteria***. An approval by the County does not relieve the owner, engineer or designer from responsibility of ensuring that the calculations, plans, specifications, construction and record drawings are in compliance with these ***Criteria***.

The UD&FCD may be requested to review reports and construction plans required by these ***Criteria***. Where delineated floodplains, major drainageway improvements or drainageways eligible for UD&FCD maintenance assistance are involved within the UD&FCD boundary, their approval will be required.

1.8 Waivers

Waivers of these ***Criteria*** will be reviewed and approved in accordance with the waiver section in the ***Regulation***.

1.9 Interpretation

In the interpretation and application of the provisions of these ***Criteria***, the following will govern:

1.9.1 In its interpretation and application, the provisions will be regarded as the minimum requirements for the protection of the public health, safety, comfort, convenience, prosperity and welfare of the residents of the County.

1.9.2 Whenever a provision of these ***Criteria*** and any other provisions of the ***Regulation*** or any provision in any law, ordinance, resolution, rule or regulation of any kind, contain any restriction covering any of the same subject matter, whichever restrictions are more restrictive or impose higher standards of requirements will govern.

1.9.3 These ***Criteria*** will not abrogate or annul any permits or approved drainage reports, construction plans, easements or covenants issued before the effective date of these ***Criteria***.

1.10 Relationship to Other Standards

These ***Criteria*** are consistent with the UD&FCD criteria. If special districts impose a more stringent criteria, this difference is not considered a conflict. If the State or Federal Government imposes stricter criteria, standards or requirements, these will be incorporated into the County's requirement after due process and public hearing(s) needed to modify the County's regulations and standards.

1.11 Abbreviations

As used in these ***Criteria***, the following abbreviations will apply:

ASP	Aluminized Steel Pipe
BMPs	Best Management Practice(s)
CDOT	Colorado Department of Transportation
CRS	Colorado Revised Statute
CMP	Corrugated Metal Pipe
CSP	Corrugated Steel Pipe
CSPA	Corrugated Steel Pipe Arch
CUHP	Colorado Urban Hydrograph Procedure
EURV	Excess Urban Runoff Volume
FEMA	Federal Emergency Management Agency
FHAD	Flood Hazard Area Delineation
FIRM	Flood Insurance Rate Map
HDPE	High Density Polyethylene Pipe
JCD	Jefferson Conservation District
MDCIA	Minimized Directly Connected Impervious Area
MPLD	Mountain Porous Landscape Detention
NOAA	National Oceanic and Atmospheric Administration
RCP	Reinforced Concrete Pipe
ROW	Right-of-Way
UD&FCD	Urban Drainage and Flood Control District
USDCM	Urban Storm Drainage Criteria Manual (Manual)

Chapter 2 - Drainage Planning Submittal Requirements

2.1 Introduction

Drainage reports and plans, construction drawings, specifications and as-built information will be submitted and approved as required by the ***Regulation*** and Building Permit Procedure. All submitted reports will be clearly and cleanly reproduced. Photostatic copies of charts, tables, nomographs, calculations or any other referenced material will be legible. Washed out, blurred or unreadable portions of the report are unacceptable and could warrant resubmittal of the report. The submittal will include a declaration of the type of report submitted (i.e., Phase-I, Phase-II or Phase-III). Incomplete or absent information may result in the report being rejected for review.

A pre-application consultation is suggested of all applicants for all processing steps of the ***Regulation***. The applicant will consult with Planning and Zoning for general information regarding regulations, required procedures, possible drainage problems and specific submittal requirements.

2.2 Phase I Drainage Report

For development processes that require the submittal of a Phase I Drainage Report, a Phase I Report which complies with the requirements of Section 2.2 must be submitted by the developer or owner.

This report will review at a conceptual level the feasibility and design characteristics of the proposed development. The Phase I Drainage Report will be in accordance with the following outline and contain the applicable information listed:

2.2.1 Phase I Report Contents

The following is an outline of the minimum Phase I Drainage Report requirements.

I. General Location and Description

A. Location

1. Vicinity map

2. City, County, State Highway and local streets within and adjacent to the site or the area to be served by the drainage improvements

3. Township, range, section, 1/4 section

4. Major drainageways and facilities

5. Names of surrounding developments

B. Description of Property

1. Area in acres

2. Ground cover (type of ground cover and vegetation)

3. Major drainageways

4. Existing major irrigation facilities such as ditches and canals

5. Proposed land use

6. Floodplains delineated by FHAD studies or on FEMA FIRM maps

7. Significant geologic features

II. Drainage Basins and Sub-Basins

A. Major Basin Description

1. Reference and include maps of major drainageway planning studies such as FHAD reports, major drainageway planning reports and FIRMs.

2. Major basin drainage characteristics, existing and planned land uses within the basin, as defined by Planning and Zoning

3. Identification of all nearby irrigation facilities which will influence or be influenced by the local drainage

B. Sub-Basin Description

1. Discussion of historic drainage patterns of the property in question

2. Discussion of on-site and off-site drainage flow patterns and impact on development under existing and fully developed basin conditions as defined by Planning and Zoning

III. Drainage Facility Design

A. General Concept

1. Discussion of concept and typical drainage patterns
2. Discussion of compliance with off-site runoff considerations
3. Discussion of anticipated and proposed drainage patterns
4. Discussion of the content of tables, charts, figures, plates or drawings presented in the report

B. Specific Details (Optional Information)

1. Discussions of drainage problems encountered and solutions at specific design points
2. Discussion of detention storage and outlet design
3. Discussion of maintenance and access aspects of the design
4. Discussion of impacts of concentrating the flow on the downstream properties

C. Specific Details (Required for any proposed modifications to the Floodplain Overlay District)

1. Discussion on whether the floodplain modification will affect off-site property
2. Discussion of the design of the modified watercourse, in conformance with UD&FCD and County requirements
3. Discussion of the location of the modified watercourse and reason for modifications
4. Discussion of any State and Federal permits that are required for the modification of the watercourse
5. Hydraulic and hydrologic calculations for the 100-year storm demonstrating that the modified watercourse will maintain the flood carrying capacity
6. Discussion of the maintenance requirements and identification of the organization responsible for maintenance
7. A developer and engineer's certifications as required for a Phase III Drainage Report

IV. References

Reference all criteria, master plans and technical information used in support of concept.

2.2.2 Phase I Drawing Contents

(a) **General Location Map:** Drawings may be 24" x 36" or 22" x 34". A map will be provided in sufficient detail to identify drainage flows entering and leaving the development and general drainage patterns. The map should be at a scale of 1" = 1000' to 1" = 4000' and show the path of all drainage from the upper end of any off-site basins to the defined major drainageways. The map should identify any major facilities from the property (i.e., development, irrigation ditches, existing detention facilities, culverts, storm sewers) along the flow path to the nearest major drainageway.

Basins and divides are to be identified and topographic contours are to be included.

(b) **Floodplain Information:** A copy of applicable FHAD and/or FIRM maps showing the location of the subject property will be included with the report as outlined in Section 2.2.1. All major drainageways (see Section 3.2.5) will have the floodplain defined and shown on the report drawings.

(c) **Drainage Plan:** Map(s) of the proposed development at a scale of 1" = 20' to 1" = 100' on a 24" x 36" or 22" x 34" drawing will be included. The plan should show the following:

1. Existing topographic contours at 2-foot maximum intervals. In mountain areas, the maximum interval is 5 feet. The contours should extend a minimum of 100 feet beyond the property lines
2. All existing drainage facilities
3. Approximate flooding limits based on available information
4. Conceptual major drainage facilities including detention basins, storm sewers, swales, riprap and outlet structures in the detail consistent with the proposed development plan
5. Major drainage boundaries and sub-boundaries
6. Any off-site feature influencing development
7. Proposed flow directions and, if available, proposed contours
8. Legend to define map symbols
9. Title block in lower right corner

2.3 Phase II Drainage Report

The purpose of the Phase II Drainage Report is to identify and/or refine conceptual solutions to the problems which may occur on-site and off-site as a result of the development. For development processes that require the submittal of a Phase II Drainage Report, a Phase II Drainage Report which complies with the requirements of Section 2.3 must be submitted by the developer or owner. All reports will be typed on 8-1/2" x 11" paper and bound. The drawings, figures, plates and tables will be bound with the report or included in a pocket attached to the report. The report will include a cover letter presenting the preliminary design for review and will be prepared by or supervised by an engineer licensed in Colorado. The report will contain a certification sheet as follows:

> "This report (*plan*) for the Phase II drainage design of (*name of Development*) was prepared by me (*or under my direct supervision*) in accordance with the provisions of Jefferson County Storm Drainage Design and Technical Criteria and was designed to comply with the provisions thereof. I understand that Jefferson County does not and will not assume liability for drainage facilities designed by others."
>
> _____
>
> Registered Professional Engineer
>
> State of Colorado No. _____
>
> (*Affix Seal*)

2.4 Phase III Drainage Report

The purpose of the Phase III Drainage Report is to provide final drainage design for a project including design details for drainage facilities.

For development processes that require the submittal of a Phase III Drainage Report, a Phase III Report which complies with the requirements of Sections 2.3 and 2.4 must be submitted by the developer or owner. If applicable, the Phase III Drainage Report must address comments made during review of the Phase II Report.

All reports will be typed on a 8-1/2" x 11" paper and bound. The drawings, figures, charts, plates and/or tables will be bound with the report or included in a folder/pocket attached at the back of the report. The report will include a cover letter presenting the final design for review and will be prepared by or under the direction of an engineer licensed in Colorado, certified as shown below in for the Phase III report. The report must contain a developer and engineer certification sheet as follows:

> "This report (plan) for the Phase III drainage and water quality design of (name of Development) was prepared by me (*or under my direct supervision*) in accordance with the provisions of Jefferson County Storm Drainage Design and Technical Criteria and was designed to comply with the provisions thereof. I understand that Jefferson County does not and will not assume liability for drainage facilities designed by others."
>
> _____
>
> Registered Professional Engineer
>
> State of Colorado No. _____
>
> (*Affix Seal*)
>
> "(Owner/Applicant) hereby certifies that the drainage facilities for (Name of Development) will be constructed according to the design presented in this report. I understand that Jefferson County does not and will not assume liability for drainage facilities designed or reviewed by my engineer. I also understand that Jefferson County relies on the representations of others to establish that drainage facilities are designed and built in compliance with applicable guidelines, standards or specifications. Review by Jefferson County can therefore in no way limit or diminish any liability which I or any other party may have with respect to the design or construction of such facilities."
>
> (Owner/Applicant)_____
>
> By: _____
>
> Date _____

The Phase III Drainage Report will be prepared in accordance with the outline shown in Section 2.4.1. The report drawings will follow the requirements presented in Section 2.4.2 below.

Three (3) signed and stamped original copies of the approved Phase III Drainage Plan and Report will be submitted to the County for signature and retention in their files.

2.4.1 Phase II and Phase III Report Contents

The Report will be in accordance with the following outline and contains the applicable information listed:

I. General Location and Description

A. Location

1. Vicinity map
2. Township, range, section, 1/4 section
3. Local streets within and adjacent to the subdivision with ROW width shown
4. Major drainageways, facilities and easements within and adjacent to the site
5. Names of surrounding developments

B. Description of Property

1. Area in acres
2. Ground cover (type of trees, shrubs, vegetation, general soil conditions, topography and slope)
3. National Resources Conservation Service (NRCS) soils classification map and discussion
4. Major drainageways
5. General project description
6. Irrigation facilities
7. Proposed land use

II. Drainage Basins And Sub-Basins

A. Major Drainage Basins

1. On-site and off-site major drainage basin characteristics and flow patterns and paths
2. Existing and proposed land uses within the basins if known
3. Discussion of all drainageway planning or floodplain delineation studies that affect the major drainageways, such as FHAD Studies and Outfall System Planning studies
4. Discussion of the condition of any channel within or adjacent to the development, including existing conditions, need for improvements and impact on the proposed development
5. Discussion of the impacts of the off-site flow patterns and paths, under fully developed conditions
6. Identification of all irrigation facilities within the basin which will influence or be influenced by the local drainage

B. Sub-Drainage Basins

1. On-site and off-site minor drainage basin characteristics and flow patterns and paths under historic and developed conditions
2. Existing and proposed land uses within the basins
3. Discussion of irrigation facilities that will influence or be impacted by the site drainage
4. Discussion of the impacts of the off-site flow patterns and paths, under fully developed conditions

III. Drainage Design Criteria

A. Regulations: Discussion of the optional provisions selected or the deviation from the ***Criteria***, if any, and its justification

B. Development Criteria Reference and Constraints

1. Discussion of previous drainage studies (i.e., project master plans) for the site in question that influence or are influenced by the drainage design and how the plan will affect drainage design for the site
2. Discussion of the effects of adjacent drainage studies
3. Discussion on drainageways and storage facilities and how they interrelate to water rights
4. Discussion of the drainage impact of site constraints such as streets, utilities, light rail rapid transit, existing structures and development or site plan

C. Hydrological Criteria

1. Identify design rainfall

2. Identify runoff calculation method

3. Identify detention discharge and storage calculation method

4. Identify design storm recurrence intervals

5. Discussion and justification of other criteria or calculation methods used that are not presented in or referenced by these ***Criteria***

D. Hydraulic Criteria

1. Identify various capacity references

2. Discussion of other drainage facility design criteria used that are not presented in the ***Criteria***

E. Waivers from Criteria

1. Identify provisions by section number for which a waiver is requested

2. Provide justification for each waiver requested

IV. Drainage Facility Design

A. General Concept

1. Discussion of concept and typical drainage patterns

2. Discussion of compliance with off-site runoff considerations

3. Discussion of the content of tables, charts, figures, plates or drawings presented in the report

4. Discussion of anticipated and proposed drainage patterns. Discuss how runoff is conveyed off-site to nearest adequate drainage facility. Discuss flow path and downstream capacity

B. Specific Details

1. Discussion of drainage problems encountered and solutions at specific design points

2. Discussion of detention storage and outlet design

3. Discussion of storm water quality facilities

4. Discussion of maintenance access and aspects of the design

5. Discussion of easements and tracts for drainage purposes, including the conditions and limitations for use

C. Stormwater Storage Facilities

1. Discuss detention pond designs, including release rates, storage volumes and water surface elevations for the EURV and emergency overflow conditions, outlet structure design, emergency spillway design, etc

2. Discuss pond outfall locations and design, including method of energy dissipation

3. Discuss how runoff is conveyed from all pond outfalls and emergency spillways to the nearest major drainageway, including a discussion of the flow path and capacity downstream of the outfall to the nearest major drainageway

4. Discuss maintenance aspects of the design and easements and tracts that are required for stormwater storage purposes

D. Water Quality Enhancement BMPs

1. Discuss the design of all structural water quality BMPs, including tributary areas, sizing, treatment volumes, design features, etc.

2. Discuss how runoff is conveyed from all pond outfalls to the nearest adequate drainage facility, including a discussion of the flow path and capacity downstream

3. Discuss the operation and maintenance aspects of the design and easements and tracts that are required for stormwater quality enhancement purposes

E. Additional Permitting Requirements

1. Section 404 of the Clean Water Act

2. The Endangered Species Act

3. Other local, state or federal requirements

V. Conclusions

A. Compliance with Standards

1. ***Criteria***

2. Major Drainageway Planning Studies

3. ***Manual***

B. Drainage Concept

1. Effectiveness of drainage design to control damage from storm runoff

2. Influence of proposed development on the Major Drainageway Planning Studies recommendation(s)

VI. References

Reference all criteria and technical information used.

VII. Appendices

A. Hydrologic Computations

1. Land use assumptions regarding adjacent properties

2. Initial and major storm runoff at specific design points

3. Historic and fully developed runoff computations at specific design points

4. Hydrographs at critical design points

5. Time of concentration and runoff coefficients for each basin

B. Hydraulic Computations

1. Open channel design

2. Detention area/volume capacity and outlet capacity calculations; depths of detention basins

3. Water Quality Volume Calculations

4. Downstream/outfall system capacity (including design storm) to major drainage system. Include a solution to mitigate downstream capacity problems from the development. See Section 3.3.3 for more information

5. Downstream/outfall system capacity for internal, adjoining and connecting major drainageways. Include a solution to mitigate downstream capacity problems from within and adjoining the development. See Section 3.3.3 for more information

6. Emergency spillway sizing calculations

7. Stabilization and grade control improvements and calculations for ditches and drainageways.

8. Energy dissipation at pipe outfalls

9. Culvert capacities (*Required for Phase III*)

10. Storm sewer capacity, including energy grade line (EGL) and hydraulic grade line (HGL) elevations (*Required for Phase III*)

11. Actual street capacity as calculated using the UD&FCD Spreadsheet. Compare with allowable depths listed in Chapter 10 (*Required for Phase III*)

12. Storm inlet capacity including inlet control rating at connection to storm sewer (*Required for Phase III*)

13. Check and/or channel drop design (*Required for Phase III*)

14. Water Quality Calculations (*Required for Phase III*)

2.4.2 Phase II and Phase III Drawing Contents

A. **Historic Drainage Conditions Plan**: All drawings will be 24″ x 36″ or 22″ x 34″in size. The plan should include the following:

1. A map in sufficient detail to identify drainage flows entering and leaving the development and general drainage patterns. The map should be at a scale of 1″ = 1000′ to 1″ = 4000′ and show the path of all drainage from the upper end of any off-site basins to the defined major drainageways (see Drainage Policy). The map will identify any major construction (i.e., development, irrigation ditches, existing detention facilities, culverts, storm sewers) along the entire path of drainage. Basins and divides are to be identified and topographic contours are to be included.

2. Boundary of the proposed development at a scale of 1″ = 20′ to 1″ = 100′

3. Existing floodplain limits for all major drainageways (see Section 3.2.3)

4. Existing contours at 2-foot maximum intervals. In mountain areas, a maximum interval of 5 feet may be used if approved by Planning and Zoning. The contours should extend a minimum of 100 feet beyond the property lines

5. Property lines and easements with purposes noted

6. Existing drainage facilities and structures, including irrigation ditches, street/roadside ditches, crosspans, drainageways, gutter flow directions and culverts. All pertinent information such as material, size, shape, slope and location should also be included

7. Overall historic drainage area boundary and drainage sub-area boundaries

8. Definition of flow path leaving the development through the downstream properties ending at a major drainageway or adequate drainage facility

9. Legend to define map symbols (*see Table 201 for symbol criteria*)

10. Title block in lower right hand corner

B. **Developed Drainage Conditions Plan**: Map(s) of the proposed development at a scale of 1″ = 20′ to 1″ = 100′ on a 24″ x 36″ or 22″ x 34″ drawing will be included. The plan will show the following:

1. Boundary of the proposed development at a scale of 1″ = 20′ to 1″ = 100′.

2. Existing and proposed contours at 2-feet maximum intervals. In mountain areas, the maximum interval is 5 feet. The contours should extend a minimum of 100 feet beyond the property lines.

3. Property lines and easements with purposes noted.

4. Streets, indicating ROW width, flowline width, curb type, sidewalk and approximate slopes.

5. Existing drainage facilities and structures, including irrigation ditches, street/roadside ditches, crosspans, drainageways, gutter flow directions and culverts. All pertinent information such as material, size, shape, slope and location will also be included.

6. Overall drainage area boundary and drainage sub-area boundaries.

7. Proposed type of street flow (i.e., vertical or combination curb and gutter), street/roadside ditch, gutter, slope and flow directions and crosspans.

8. Proposed storm sewers and open drainageways, including inlets, manholes, culverts and other appurtenances, including riprap protection.

9. Proposed outfall point for runoff from the developed area and facilities to convey flows to the final outfall point without damage to downstream properties.

10. Proposed storm water quality facilities.

11. Routing and accumulation and flows at various critical points for the initial storm runoff listed on the drawing using the format shown in Table 201.

12. Routing and accumulation of flows at various critical points for the major storm runoff listed on the drawing using the format shown in Table 201.

13. Volumes and release rates for detention storage facilities and information on outlet works.

14. Location and elevations of all existing and proposed floodplains affecting the property.

15. Location and (if known) elevations of all existing and proposed utilities affected by or affecting the drainage design.

16. Routing of on-site and off-site drainage flow through the development.

17. Definition of flow path leaving the development through the downstream properties ending at a major drainageway or adequate drainage facility.

18. Legend to define map symbols (see Table 201 for symbol criteria).

19. Title block in lower right hand corner.

20. Detention Pond Summary as shown in Table 201.

2.5 Abridged Drainage Report

When an applicant is requesting a stormwater detention variance, Planning and Zoning will accept an abridged drainage report in lieu of a Phase III Drainage Report to determine the eligibility of the project for a stormwater detention variance. If the stormwater detention variance is denied by Planning and Zoning, the applicant will be required to submit a Phase III Drainage Report.

1. The standard engineer's and developer's certifications in Section 2.4.
2. Calculations demonstrating that the site meets the requirements in Section 3.3.6 and 3.3.7 for a stormwater detention and water quality variance.
3. Calculations demonstrating that the project will be designed to carry surface and subsurface water to the nearest adequate street/roadside ditch, storm drain and/or natural watercourse.
4. Hydraulic and hydrologic calculations for any required and existing drainage structures to demonstrate that they meet the relevant provisions in these ***Criteria***.
5. Calculations for any drainageways that impact the property and determination of the required easement width and location.
6. Discussion of any other Phase III Drainage Report requirements that impact the property as deemed necessary by Planning and Zoning.

2.6 Exception to the Requirement for a Drainage Report

Planning Engineering will accept a letter from the applicant stating that there will be no new construction in lieu of a drainage report if all of the following conditions are met:

1. No increase in impervious area and no new construction.
2. The existing facilities on the site were constructed legally.
3. There are no drainageways that impact the property.

2.7 Construction Plans

Where drainage improvements are to be constructed, the final construction plans (24" x 36" or 22" x 34") will be submitted with the Phase III Drainage Report. Approval of the final construction plans by Planning and Zoning is a condition of issuing the construction permits. Four (4) copies of the approved plans will be submitted to the County for file. The plans for the drainage improvements will include but are not limited to:

1. Storm sewers, inlets, outlets and manholes with pertinent elevations, dimensions, type and horizontal control indicated.
2. Culverts, end sections and inlet/outlet protection with dimensions, type, elevations and horizontal control indicated.
3. Channels, ditches and swales (including side/rear yard swales) with lengths, widths, cross-sections and erosion control (i.e. riprap, concrete, grout) indicated.
4. Checks, channel drops, erosion control facilities.
5. Detention pond grading, trickle channels, outlets, forebay, micropool, overflow weir and landscaping.
6. Water Quality/Detention pond cross-section including a 100-year water surface elevation, EURV elevations, micropool, forebay, outlet structure and 1-foot freeboard.
7. Stormwater quality facilities.
8. Other drainage related structures and facilities (including, alternative water quality BMP's, underdrains and sump pump lines).
9. Maintenance access considerations.
10. Overlot grading and erosion and sedimentation control plan (refer to the Jefferson County Zoning Resolution, Land Disturbance).
11. The hydraulic grade line and energy grade line for all storm sewers will be shown on the profile sheets and calculation included in the Phase III Drainage Report.

The information required for the plans will be in accordance with sound engineering principles, these ***Criteria*** and the County requirements for subdivision designs. Construction documents will include geometric, dimensional, structural, foundation, bedding, hydraulic, landscaping and other details as needed to construct the storm drainage facility. The approved Phase III Drainage Plan will be included as part of the construction documents for all facilities affected by the drainage plan. Construction plans will be signed by a registered professional engineer as being in accordance with the County approved drainage report/drawings.

2.8 As-Built Drawings and Final Acceptance Certificate

As-built drawings for drainage facilities and grading will be submitted in accordance with the Development Agreements, Warranties and Guarantees Section of the ***Regulation***.

Table 201

Drawing Symbol Criteria and Hydrology

Review Table

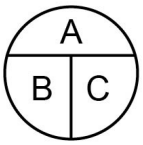

A = Basin Designation
B = Area in Acres
C = Composite Runoff Coefficients

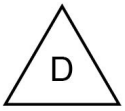

D = Design Point Designation

– – – – Basin Boundary

Summary Runoff Table

(To be placed on drainage plan)

Design Point	Contributing Area (Acres)	Runoff 5 year (CFS)	Peak 100 year (CFS)
XX	XX • XX	XX • X	XX • X

Detention Pond Summary

Pond Number	5-year Detention Volume	100 year Detention Volume	Water Quality Volume	Total Volume	5-Year Release Rate	100-year Release Rate	100-Year Water Elevation
1	X,XXX	X,XXX	X,XXX	X,XXX	X.X	X.X	XXX.X
2	X,XXX	X,XXX	X,XXX	X,XXX	X.X	X.X	XXX.X
3	X,XXX	X,XXX	X,XXX	X,XXX	X.X	X.X	XXX.X
4	X,XXX	X,XXX	X,XXX	X,XXX	X.X	X.X	XXX.X

Chapter 3 - Drainage Policy

3.1 Introduction

The provisions for adequate drainage are necessary to preserve and promote the general health, welfare and economic wellbeing of the County. Drainage is a regional feature that affects all governmental jurisdictions and all parcels of property. This characteristic of drainage makes it necessary to formulate a program that balances both public and private involvement. Overall coordination and master planning must be provided by the governmental units most directly involved, but drainage must be integrated at a regional level.

When planning drainage facilities, certain underlying principles provide direction for the effort. These principles are made operational through this set of policy statements. The application of the policy in turn is facilitated by technical criteria and data.

3.2 Basic Principles

3.2.1 Multi-Purpose Resource

The county encourages the use of stormwater runoff as a multi-purpose resource and to require space allocation for appropriate drainage facilities in the planning of new developments.

Stormwater runoff is a resource that is a subsystem of urbanization. This subsystem should be multi-purpose to satisfy the demands placed on water within urban development. The stormwater resource has the potential for a beneficial use if it is compatible with adjacent land uses and Colorado Water Law. Examples of beneficial use include groundwater infiltration and use in landscape features.

The planning of drainage facilities must be included in the development process. The provision for adequate drainage becomes a competing use for space along with other land uses. If adequate provision is not made in a land use plan for the drainage requirements, storm water runoff will conflict with other land uses and will result in water damages and will impair or even disrupt the functioning of other urban systems.

Drainage facilities can fulfill other purposes aside from just drainage. Facilities that are not typically designed for drainage, such as recreational areas and parking lots, can frequently be designed to provide water quantity and quality benefits.

Elimination or reduction in the size of detention and/or retention facilities is preferred where acceptable groundwater infiltration methods are used.

3.2.2 Water Rights

The county requires that analysis of impacts on water rights be included in the planning and design of proposed drainage facilities.

When the drainage sub-system interferes with existing water rights, the value and use of the water rights are affected. Drainageways and storage facilities frequently interrelate with water rights, which must be addressed when planning new facilities to preserve their integrity.

3.2.3 Major Drainageway

The county defines a major drainageway as any drainage flow path with a tributary area of 130 acres or more.

3.3 Regional and Local Planning

3.3.1 Post Development Flow Conditions

The county encourages infiltration and for post development flow conditions to be in a manner and quantity (flow rate) as to not do more harm than the predevelopment flow within the drainage basin, unless the owner/developer can obtain approval and/or easements from the affected property owner(s).

Colorado follows the modified civil law rule that the owner of upstream property possesses a natural easement on land downstream for drainage of surface water flowing in its natural course. Natural drainage conditions can be altered by the owner of the upstream land provided the water is not sent down in a manner or quantity to do more harm to the downstream land than formerly. During the development process, if water is allowed to flow into the development in its historic manner and quantity and is discharged in the historic manner and quantity, the alterations are generally acceptable. When the development alters the natural drainage into the development in a manner or quantity that results in more harm to the downstream land, it may violate the modified civil law rule. Likewise, if the development does not return the drainage to the natural drainage conditions or does so in a

manner or quantity that results in more harm, it may violate the modified civil law rule. Development proposals that violate the modified civil law rule will not be approved unless the owner/developer obtains approvals and/or easements from the affected property owner(s).

3.3.2 Master Planning

The county requires that new developments comply with adopted regional drainage master plans.

As set forth in Section 3.2.1, drainage planning is required for all new developments. In recognition that drainage boundaries are non-jurisdictional, the County participates in the preparation of regional basin-wide master plans. These plans define major drainage facilities, including those that are required public improvements for new developments.

3.3.3 Drainage Problem Areas

The county requires offsite analysis and drainage facilities for development in a drainage problem area. A drainage problem area is an area where there is no downstream outfall to a street, roadside ditch, open channel or storm sewer that meets the relevant requirements in these Criteria. The offsite analysis will address downstream conditions at every point along the project site boundaries where stormwater runoff will exit the property.

The county allows stormwater retention in drainage problem areas only if there is no other viable option, in the opinion of Planning and Zoning, available to resolve the drainage impact from the development. Stormwater retention facilities must be designed to meet these criteria (storage).

There are areas within the County where significant drainage problems exist. Any new development in those areas may compound the existing drainage problems. Depending on specific details of the drainage problem, the following techniques for reducing or eliminating negative impacts have been used successfully:

- Over-detention with reduced release rates
- Downstream improvements to the drainage system
- Reduction of impervious area
- Infiltration water quality BMPs
- Stormwater retention

3.3.4 Public Improvements

The county requires the construction of improvements to the local drainage system and the major drainageway as defined by the approved Phase III Drainage Report and plan for all development.

Public improvements associated with drainage may include improvements to both the local drainage system and the major drainageway. The local drainage system consists of curb and gutter, inlets and storm sewers, culverts, bridges, swales, ditches, channels, detention/retention areas and other drainage facilities required to convey the minor and major storm runoff to the major drainageway. The major drainageway system consists of channels, storm sewers, bridges, detention/retention areas and other facilities serving more than the development or property in question, that may be impacted by the development.

3.3.5 Basin Transfer

The county does not allow the inter-basin transfer of storm drainage runoff and to maintain the historic drainage path within the drainage basin. The transfer of drainage from basin to basin is a viable alternative only in certain instances and will be reviewed on a case-by-case basis. When basin transfer is permitted, the plan must achieve historic flow conditions at the confluence of the basins and meet the requirements of post development flow conditions.

Colorado drainage law recognizes the inequity of transferring the burden on managing storm drainage from one location or property to another. Liability questions also arise when the historic drainage continuum is altered. The diversion of storm runoff from one basin to another should be avoided unless specific and prudent reasons justify and dictate such a transfer. Prior to selecting a solution, alternatives should be reviewed. Planning and design of stormwater drainage systems should not be based on the premise that problems can be transferred from one location to another.

3.3.6 Stormwater Runoff Detention

The county requires that stormwater detention and/or retention be provided for all developments, unless a variance is granted as noted in the variance procedure below. The required minimum volume and maximum release rates will be determined in accordance with the requirements of these criteria. Detention/retention volumes may

be reduced with the incorporation of impervious area reduction methods identified in the stormwater quality section. Regional detention and/or retention ponds may be used in satisfying storage requirements only if it can be demonstrated that the pond(s) has adequate storage capacity and that the pond(s) has been designed and constructed in accordance with the requirements of these Criteria.

Variance Procedure:

Planning and Zoning may grant an administrative variance of the detention and/or retention requirement. The variance will only be considered if it is determined by Planning and Zoning that there are no cumulative effects from previous variances in the development proximity and the applicant demonstrates the following:

1. For non-residential and multi-family residential development, and for single family residential development with lot sizes less than five acres, cumulative impervious areas including the structures, streets/roads/driveways (paved or unpaved) and parking areas, will not total more than 10,000 square feet. The development proposal will restrict the allowable impervious area at the time of building permit issuance so that the maximum impervious area established in the variance request is not exceeded.

2. For other residential development, cumulative impervious areas including the structures, streets/roads/driveways (paved or unpaved) and parking areas, will not total more than 20,000 square feet. The development proposal should restrict the allowable impervious area at the time of building permit issuance so that the maximum impervious area established in the variance request is not exceeded.

In order for the variance to be approved, the applicant must submit an abridged drainage report as identified in Section 2.5 of these ***Criteria***. The abridged drainage report must address water quality as specified in the water quality section below.

If it is determined, to the satisfaction of Planning and Zoning, that no new impervious area will result from a development proposal, then a letter stating this information may be accepted in lieu of the requirement for submittal of a drainage report (reference Section 2.6 of these ***Criteria***).

3.3.7 Stormwater Quality

The county requires BMPs to reduce stormwater quality pollution caused by development, unless a variance is granted as noted in the variance procedure below. Regional water quality facilities may be used in satisfying the BMP requirements only if it can be demonstrated that the facility provides the required water quality capture volume and that the facility has been designed and constructed in accordance with the requirements of these Criteria.

Land development and human activities affect both the quantity and the quality of stormwater discharged to receiving waters. Development increases the volume of stormwater and the pollutants leaving the project property. To remove pollutants, the collection and conveyance infrastructure must be supplemented with collection and infiltration BMPs. The increase in impermeable areas such as rooftops, parking lots and paved areas decreases the opportunity for stormwater to infiltrate and percolate into the ground, and the absence of vegetation allows for increased flow velocity and sediment erosion.

To mitigate the negative effects of land development on stormwater quality, stormwater quality improvement BMPs are required. Refer to the ***Manual*** for BMPs and design specifications.

Variance Procedure:

Planning and Zoning may grant an administrative variance of the requirement for a Step 1 and/or Step 2 BMP. The variance will only be considered if all of the following apply:

1. A variance of the detention and/or retention requirement is approved.
2. The project disturbs less than one acre of ground.
3. The project is not part of a larger common plan of development or sale.

A common plan of development or sale is a site where multiple separate and distinct construction activities may be taking place at different times on different schedules, but still under a single plan. Examples include:

1. Phased projects and projects with multiple filings or lots, even if the separate phases or filings/lots will be constructed under separate contracts or by separate owners (e.g., a development where lots are sold to separate builders).

2. A development plan that may be phased over multiple years, but is still under a consistent plan for long-term development.

3. Projects in a contiguous area that may be unrelated but still under the same contract, such as construction of a building extension and a new parking lot at the same facility.

3.3.8 Floodplain Management

The county requires developments that impact floodplains to comply with the floodplain regulations of the Zoning Resolution and Regulation.

Although in many circumstances it may be desirable to leave the floodplain in its natural state, it is evident that development in areas encumbered by floodplains often results in alterations within the floodplain limits. The County has adopted floodplain regulations as part of its Zoning Resolution and the ***Regulation***. These regulations should be referenced when alterations within floodplains are proposed.

3.3.9 Operations and Maintenance

The county requires that maintenance access be provided to all storm drainage facilities to assure continuous operational capability of the system. The property owner is responsible for the maintenance of all drainage facilities including inlets, pipes, culverts, channels, ditches, hydraulic structures and detention basins located on their land unless modified by the development improvements agreement. Should the owner fail to adequately maintain said facilities, the county will have the right to enter said land for the purposes of operations and maintenance. All such maintenance costs will be assessed to the property owner. Where floodplains or major drainageway improvements, are in whole or in part within the UD&FCD boundary, the approval by UD&FCD is required to assure UD&FCD maintenance eligibility.

An important part of all storm drainage facilities is the continued maintenance of the facilities to ensure they will function as designed. Maintenance responsibility lies with the owner of the land, except as modified by specific agreement. Maintenance responsibility will be delineated on Plats and Final Development Plans. Maintenance access for detention ponds must be adequate for maintenance and be shown on the Plats and Final Development Plans.

3.3.10 Drainage Easement Requirements

Drainage easements are required for all onsite drainage facilities and for offsite drainage facilities in accordance with Section 3.3.1. All drainage easements must be dedicated to Jefferson County in a form acceptable to the County Attorney's office and must be shown on plats and/or final development plans. The county has the right to access drainage easements, and the right, but not the obligation, of construction and/or maintenance within drainage easements. Drainage easements will be kept clear of obstructions to the flow and/or obstructions to maintenance access.

The easement requirements are indicated on the following table.

	Drainage Facility	Drainage Easement Width
1.	Storm Sewer/Subsurface Groundwater Collection System Mains /Interceptor	
	(a) Underdrains less than 36" dia.	20'
	(b)Underdrains equal to or greater than 36" dia.	Twice the pipe invert depth with sewer placed within the middle third of the easement (minimum width = 20')
2.	Open Channel/Swales	
	(a) Q_{100} less than 1 cfs	5' minimum
	(b) Q_{100} greater than or equal to 1 cfs and/or less than or equal to 20 cfs	15' minimum
	(c) Q100 greater than 20 cfs	15' minimum (must accommodate Q_{100} plus one foot of freeboard and required access)
3.	Detention/Retention/Water Quality Ponds/MPLDs	As required to contain storage and associated facilities plus adequate maintenance access to the pond and around perimeter.
4.	Along Side Lot Lines for Single-family Residential Subdivisions as required.	5' minimum, centered on the lot line.

3.3.11 Storage Facilities

The policy of the county is to:

1. Restrict development to areas outside of the reservoir's high water line created by the design flood for the emergency spillway.

2. Restrict development to areas outside of the high water line created by the breach of a dam (excepting existing Class 1 classified dams). If the development proposal is to improve the existing dam to a Class 1 classification, plans must be approved by the reservoir owner and dam safety branch of the Colorado Division of

Water Resources. The improvements to the dam must be completed, inspected and approved prior to any building permit within the boundary of the plat. All construction plans required to improve a dam to a class 1, as indicated above, is the responsibility of the developer.

3. Require developments downstream of a Class 2 dam to have the dam safety branch of the Colorado Division of Water Resources determine if the proposed development is within the high-water line created by the breach of dam. For developments downstream of a Class 3 or Class 4 dam, a breach of dam study may be required to determine the limits of the breach of dam if the dam safety branch of the Colorado Division of Water Resources does not have the information available. The dam safety branch of the Colorado Division of Water Resources must approve the required study.

4. Restrict development to areas outside emergency spillway paths, beginning at the dam and proceeding to the point where the flood water returns to the natural drainage course.

The problem of dam safety and the related hazard of the emergency spillways has been brought to the attention of the public by nationwide dam failures, and is the subject of a National Dam Safety Program by the federal government. Jurisdictional dams are classified by the State Engineer as high, moderate, low or Class 1 to Class 4 structures depending on conditions downstream. Dams are classified as high hazard or Class 1 structures when, in the event of failure, there is a potential loss of life. Dams presently rated as low to moderate or Class 2 to Class 4 hazard structures may be changed to higher hazard rating if development occurs within the potential path of flooding due to a dam breach. In this case, the reservoir owners would be liable for the cost of upgrading the structure to meet the higher hazard classification.

3.3.12 Inadvertent Detention Storage

The county does not assume any reduction in peak flows for inadvertent stormwater storage created by embankments with undersized culverts when calculating downstream flows, unless such detention is covered by agreement with the county and is designed and constructed in accordance with these Criteria.

The county does not assume any reduction in peak flows for inadvertent stormwater storage due to privately owned non-flood-control reservoirs. For publicly owned water storage reservoirs, with the approval of the owner, only detention storage above the spillway crest can be used in the calculation of downstream flows.

3.3.13 Irrigation Facilities

The policies of the county are as follows:

1. To require development to direct storm runoff into historic and natural drainageways and avoid discharging into irrigation ditches, unless the discharge is approved by the ditch company or equivalent entity.

2. Whenever development will alter patterns of the storm drainage into irrigation ditches by increasing flow rates, volumes or changing points of concentration, the written consent from the ditch company or equivalent entity is required.

3. The discharge of runoff into the irrigation ditch will be approved only if such discharge is consistent with an adopted master drainage plan and is in the best interest of the county.

4. Whenever irrigation ditches cross major drainageways within the developing area, the developer is required to design and construct the appropriate structures to separate storm runoff from ditch flows subject to the condition noted in Policy 3 above.

5. Whenever physical modifications and/or relocation of irrigation ditches are proposed in conjunction with development, written consent from the ditch company or equivalent entity will be submitted. Relocated irrigation ditches will not be placed in public rights-of-way except for crossings of public right-of-way that are at right angles or as close to right angles as possible.

6. If storm water is carried within an irrigation ditch, a drainage easement will be dedicated to the county and will meet the easement width set forth in Section 3.3.10 of these Criteria. An irrigation ditch easement will be dedicated within the development boundary at the discretion of the ditch company or equivalent entity. The irrigation ditch easement agreement will address the relinquishment of any irrigation ditches that will be abandoned within the development boundary.

7. If an irrigation ditch is abandoned or terminated by the ditch company or equivalent entity, said ditch is deemed to be a natural drainageway. Modifications or alterations to the abandoned or terminated ditch are only allowed subject to approval by Jefferson County in accordance to these Criteria.

8. To assume that an irrigation ditch does not intercept the storm runoff from the upper basin and that the upper basin is tributary to the basin area downstream of the ditch. The physical aspects of a bermed irrigation ditch structure within a development will be analyzed to determine any drainage impacts of new development.

There are many irrigation ditches and reservoirs in the county area. The ditches and reservoirs have historically intercepted the storm runoff from the rural and agricultural type basins, generally without major problems. With urbanization of the basins, however, the storm runoff has increased in rate, quantity and frequency, as well as changes in water quality. The irrigation facilities can no longer be utilized indiscriminately as drainage facilities and, therefore, policies have been established to achieve compatibility between urbanization and the irrigation facilities.

In evaluating the interaction of irrigation ditches with a major drainageway for the purpose of basin delineation, the ditch should not be utilized as a basin boundary due to the limiting flow capacity of the ditch. The ditches will generally be flowing full or near full during major storms; therefore, the tributary basin runoff would flow across the ditch.

Irrigation ditches are designed with flat slopes and limited carrying capacity, which decreases in the downstream direction. As a general rule, irrigation ditches cannot be used as an outfall point for the storm drainage system because of these physical limitations. In addition, certain ditches are abandoned after urbanization and could not be successfully utilized for storm drainage.

In certain instances irrigation ditches have been successfully utilized as outfall points for the initial drainage system, but only after a thorough hydrological and hydraulic analysis. Since the owner's liability from ditch failure increases with the acceptance of storm runoff, the responsibility must be clearly defined before a combined system is approved.

3.4 Planning and Design

3.4.1 Minor and Major Drainage System

The county requires that all development include the planning, designing and implementation for both the minor and major drainage systems.

The county requires that all minor drainage systems be sized without accounting for peak flow reductions from on-site detention, unless otherwise approved by Planning and Zoning.

Every urban area has two separate and distinct drainage systems, whether or not they are actually planned or designed. One is the Minor Drainage System and the other is the Major Drainage System, which are combined to form the Total Drainage System.

The Major Drainage System is designed to convey runoff from the 100-year recurrence interval flood to minimize health and life hazards, damage to structures and interruption to traffic and services. Major storm flows can be carried in the urban street system (within acceptable depth criteria), channels, storm sewers and other facilities.

The Minor Drainage System is designed to transport the runoff from five-year frequency events with a minimum disruption to the urban environment. Minor storm drainage can be conveyed in the curb and gutter area of the street or street/roadside ditch (subject to street classification and capacity) by storm sewer, channel or other conveyance facility.

3.4.2 Storm Runoff

The county allows storm runoff to be determined by either the Rational method or the Colorado Urban Hydrograph Procedure (CUHP), within the limitations as set forth in these criteria. For basins larger than 160 acres, the peak flows and volumes will be determined by CUHP.

3.4.3 Streets

The county allows the use of streets for drainage within certain limitations as defined in these Criteria.

Streets are an integral part of the urban drainage system and may be used for transporting storm runoff up to design limits. The engineer should recognize that the primary purpose of streets is for traffic, and therefore the use of streets for storm runoff must be restricted.

3.4.4 Floodproofing Existing Structures

The county encourages the floodproofing of existing structures not in conformance with the adopted floodplain regulations by utilizing the criteria presented in the "Homeowners Guide to Retrofitting, FEMA".

Floodproofing can be defined as those measures which reduce the potential for flood damages to existing properties within a floodplain. The floodproofing measures can range from elevating structures to intentional flooding of noncritical building spaces to minimize structural damages. Floodproofing measures are only a small part of good floodplain management which encourages wise floodplain development to minimize the adverse effects of floods.

Chapter 4 - Floodplain Regulations

As set forth in the Floodplain Overlay District of the Zoning Resolution and the ***Regulation***, the regulation of floodplains is necessary to preserve and promote the general health, welfare and economic well being of the region.

Chapter 5 - Rainfall

5.1 Introduction

Presented in this section are the design rainfall data to be used with the CUHP and the Rational Method. All hydrological analysis within the jurisdiction of these ***Criteria*** will utilize the rainfall data presented herein for calculating storm runoff.

The design storms and time intensity frequency curves for the County were developed using the rainfall data and procedures presented in the ***Manual*** and are presented herein for convenience.

5.2 Jefferson County Rainfall Zones

5.2.1 Description of the Zones

A review of the isopluvial maps presented in the NOAA Atlas for Colorado shows that Jefferson County can be divided into four rainfall zones. Within each zone, the precipitation values for various return periods and duration storms up to 0.4 inch within a small area of the County. These zones are delineated on Figure-501 and are discussed below:

Zone 1: Covers the area from the east Jefferson County line to the 6000-foot contour at the foothills boundary. The point rainfall values in this zone vary less than 0.4 inch for return periods from 2-year to 100-year and for storm durations from 1 hour to 6 hours.

Zone IIA: Covers the area from the 6000-foot contour to the 7500-foot contour and generally represents the foothills of the front range. The point rainfall values in this zone decrease from east to west by less than 0.3 inch for the storm durations and return periods noted.

Zone IIB: Covers the area from the 7500-foot contour to a line defined by the South Platte drainage basin tributary to the town of South Platte. The point rainfall values in this zone decrease from east to west by less than 0.4 inch.

Zone III: Covers the area tributary to the South Platte River at the town of South Platte and is bounded on the south and west by the County lines. The point rainfall values in this zone vary by less than 0.4 inch.

5.2.2 Selecting the Rainfall Zone

Since some of the drainage basins will include areas from more than one zone, the following criteria will be used to select the design rainfall and intensity date. Basin area refers to the actual basin or sub-basin for which storm runoff information is being calculated and not necessarily the entire watershed area.

a. If 50 percent or more of the basin area lies in a given zone, the data for that zone will be used.

b. For those basins within three rainfall zones, the zone data with the largest basin area will be used.

5.3 Colorado Urban Hydrograph Procedure Design Storms

For drainage basins less than five square miles, a two-hour storm distribution without area adjustment of the point rainfall values will be used for the CUHP. For drainage basins between five and ten square miles, a two-hour storm distribution is used but the incremental rainfall values are adjusted for the large basin area in accordance with suggested procedures in the NOAA Atlas for Colorado. The adjustment is an attempt to relate the average of all point values for a given duration and frequency within a basin to the average depth over the basin for the same duration and frequency. For drainage basins between ten and twenty square miles, a three-hour storm duration with adjustment for area will be used. The distribution for the last hour was obtained by uniformly distributing

the difference between the two and three-hour point rainfall values. The adjustment for area was obtained from the NOAA Atlas for Colorado. The incremental rainfall distributions for all basin areas up to 20 square miles are presented in Table 502A through Table 502D.

5.4 Time-Intensity-Frequency Curves

The Time-Intensity-Frequency curves for each zone were developed by distributing the one-hour point rainfall values (Table 501) using the factors obtained from the NOAA Atlas presented below:

Factors for Durations of Less Than One Hour

Duration (minutes)	5	10	15	30
Ratio to one hour depth	0.29	0.45	0.57	0.79

Source: NOAA Atlas 2, Volume III, Colorado 1973

The point values were then converted to intensities and plotted on Figure 502. The data are also presented in Table 503.

Table 501

Design Point Rainfall Values

	One-Hour Point Rainfall (In.)				
County Zone	**2-Year**	**5-Year**	**10-Year**	**50-Year**	**100-Year**
Jefferson I	1.02	1.42	1.68	2.32	2.66
Jefferson IIA	0.95	1.33	1.57	2.17	2.48
Jefferson IIB	0.85	1.19	1.39	1.93	2.20
Jefferson III	0.73	1.06	1.26	1.79	2.06

Table 502A

CUHP Design Storm for Zone I - Incremental Rainfall Depth/Return Period

	Basins Less Than 5 Sq. Miles					Basins Between 5 and 10 Sq. Miles					Basins Between 10 and 20 Sq. Miles				
Time**	2-Yr*	5-Yr*	10-Yr*	50-Yr*	100-Yr*	2-Yr*	5-Yr*	10-Yr*	50-Yr*	100-Yr*	2-Yr*	5-Yr*	10-Yr*	50-Yr*	100-Yr*
5	0.02	0.03	0.03	0.03	0.03	0.02	0.03	0.03	0.03	0.03	0.02	0.03	0.03	0.03	0.03
10	0.04	0.05	0.06	0.08	0.08	0.04	0.05	0.06	0.08	0.08	0.04	0.05	0.06	0.08	0.08
15	0.09	0.12	0.14	0.12	0.12	0.09	0.12	0.14	0.12	0.12	0.09	0.12	0.14	0.12	0.12
20	0.16	0.22	0.25	0.19	0.21	0.16	0.21	0.24	0.19	0.21	0.15	0.20	0.23	0.19	0.21
25	0.26	0.36	0.42	0.35	0.37	0.24	0.35	0.40	0.34	0.36	0.23	0.32	0.38	0.32	0.33
30	0.14	0.18	0.20	0.58	0.67	0.14	0.17	0.19	0.56	0.64	0.13	0.16	0.18	0.52	0.60
35	0.06	0.08	0.09	0.28	0.37	0.06	0.08	0.09	0.24	0.36	0.06	0.08	0.09	0.25	0.33
40	0.05	0.06	0.07	0.19	0.21	0.05	0.06	0.07	0.19	0.21	0.05	0.06	0.07	0.19	0.21
45	0.03	0.05	0.06	0.12	0.16	0.03	0.05	0.06	0.12	0.16	0.03	0.05	0.06	0.12	0.16
50	0.03	0.05	0.05	0.12	0.13	0.03	0.05	0.05	0.12	0.13	0.03	0.05	0.05	0.12	0.13
55	0.03	0.04	0.05	0.07	0.11	0.03	0.04	0.05	0.07	0.11	0.03	0.04	0.05	0.07	0.11
60	0.03	0.04	0.05	0.07	0.11	0.03	0.04	0.05	0.07	0.11	0.03	0.04	0.05	0.07	0.11
65	0.03	0.04	0.05	0.07	0.11	0.03	0.04	0.05	0.07	0.11	0.03	0.04	0.05	0.07	0.11
70	0.02	0.04	0.05	0.06	0.05	0.02	0.04	0.05	0.06	0.05	0.02	0.04	0.05	0.06	0.05
75	0.02	0.03	0.05	0.06	0.05	0.02	0.03	0.05	0.06	0.05	0.02	0.03	0.05	0.06	0.05
80	0.02	0.03	0.04	0.04	0.03	0.02	0.03	0.04	0.04	0.03	0.02	0.03	0.04	0.04	0.03
85	0.02	0.03	0.03	0.04	0.03	0.02	0.03	0.03	0.04	0.03	0.02	0.03	0.03	0.04	0.03
90	0.02	0.03	0.03	0.03	0.03	0.02	0.03	0.03	0.03	0.03	0.02	0.03	0.03	0.03	0.03
95	0.02	0.03	0.03	0.03	0.03	0.02	0.03	0.03	0.03	0.03	0.02	0.03	0.03	0.03	0.03
100	0.02	0.02	0.03	0.03	0.03	0.02	0.02	0.03	0.03	0.03	0.02	0.02	0.03	0.03	0.03
105	0.02	0.02	0.03	0.03	0.03	0.02	0.02	0.03	0.03	0.03	0.02	0.02	0.03	0.03	0.03
110	0.02	0.02	0.03	0.03	0.03	0.02	0.02	0.03	0.03	0.03	0.02	0.02	0.03	0.03	0.03
115	0.01	0.02	0.03	0.03	0.03	0.01	0.02	0.03	0.03	0.03	0.02	0.02	0.03	0.03	0.03
120	0.01	0.02	0.02	0.03	0.03	0.01	0.02	0.02	0.03	0.03	0.01	0.02	0.02	0.03	0.03
125											0.01	0.02	0.02	0.03	0.03
130											0.01	0.02	0.02	0.03	0.03
135											0.01	0.02	0.02	0.03	0.03
140											0.01	0.02	0.02	0.02	0.03
145											0.01	0.01	0.02	0.02	0.03
150											0.01	0.01	0.01	0.02	0.02
155											0.01	0.01	0.01	0.02	0.02
160											0.01	0.01	0.01	0.02	0.02
165											0.01	0.01	0.01	0.01	0.02
170											0.01	0.01	0.01	0.01	0.01
175											0.01	0.01	0.01	0.01	0.01
180											0.01	0.01	0.01	0.01	0.01
Total	**1.17**	**1.61**	**1.89**	**2.68**	**3.05**	**1.15**	**1.58**	**1.85**	**2.61**	**3.00**	**1.25**	**1.69**	**1.98**	**2.79**	**3.16**

***Time in minutes*
**Rainfall in inches*

Table 502B

CUHP Design Storm For Zone IIA - Incremental Rainfall Depth/Return Period

	Basins Less Than 5 Sq. Miles					Basins Between 5 and 10 Sq. Miles					Basins Between 10 and 20 Sq. Miles				
Time**	2-Yr*	5-Yr*	10-Yr*	50-Yr*	100-Yr*	2-Yr*	5-Yr*	10-Yr*	50-Yr*	100-Yr*	2-Yr*	5-Yr*	10-Yr*	50-Yr*	100-Yr*
5	0.02	0.03	0.03	0.03	0.02	0.02	0.03	0.03	0.03	0.02	0.02	0.03	0.03	0.03	0.02
10	0.04	0.05	0.06	0.08	0.07	0.04	0.05	0.06	0.08	0.07	0.04	0.05	0.06	0.08	0.07
15	0.08	0.12	0.13	0.11	0.11	0.08	0.12	0.13	0.11	0.11	0.08	0.12	0.13	0.11	0.11
20	0.15	0.20	0.24	0.17	0.20	0.14	0.20	0.23	0.17	0.20	0.14	0.18	0.21	0.17	0.20
25	0.24	0.33	0.39	0.33	0.35	0.23	0.32	0.38	0.31	0.33	0.22	0.30	0.35	0.29	0.32
30	0.13	0.17	0.19	0.54	0.62	0.12	0.17	0.18	0.52	0.60	0.12	0.15	0.17	0.49	0.56
35	0.06	0.08	0.09	0.26	0.35	0.06	0.08	0.09	0.25	0.33	0.06	0.08	0.09	0.23	0.31
40	0.05	0.06	0.07	0.17	0.20	0.05	0.06	0.07	0.17	0.20	0.05	0.06	0.07	0.17	0.20
45	0.03	0.05	0.06	0.11	0.15	0.03	0.05	0.06	0.11	0.15	0.03	0.05	0.06	0.11	0.15
50	0.03	0.05	0.05	0.11	0.12	0.03	0.05	0.05	0.11	0.12	0.03	0.05	0.05	0.11	0.12
55	0.03	0.04	0.05	0.07	0.10	0.03	0.04	0.05	0.07	0.10	0.03	0.04	0.05	0.07	0.10
60	0.03	0.04	0.05	0.07	0.10	0.03	0.04	0.05	0.07	0.10	0.03	0.04	0.05	0.07	0.10
65	0.03	0.04	0.05	0.07	0.10	0.03	0.04	0.05	0.07	0.10	0.02	0.04	0.05	0.07	0.10
70	0.02	0.04	0.05	0.05	0.05	0.02	0.04	0.05	0.05	0.05	0.02	0.04	0.05	0.05	0.05
75	0.02	0.03	0.05	0.05	0.05	0.02	0.03	0.05	0.05	0.05	0.02	0.03	0.05	0.05	0.05
80	0.02	0.03	0.04	0.04	0.03	0.02	0.03	0.04	0.04	0.03	0.02	0.03	0.04	0.04	0.03
85	0.02	0.03	0.03	0.04	0.03	0.02	0.03	0.03	0.04	0.03	0.02	0.03	0.03	0.04	0.03
90	0.02	0.03	0.03	0.03	0.03	0.02	0.03	0.03	0.03	0.03	0.02	0.03	0.03	0.03	0.03
95	0.02	0.03	0.03	0.03	0.03	0.02	0.03	0.03	0.03	0.03	0.02	0.03	0.03	0.03	0.03
100	0.02	0.02	0.03	0.03	0.03	0.02	0.02	0.03	0.03	0.03	0.02	0.02	0.03	0.03	0.03
105	0.02	0.02	0.03	0.03	0.03	0.02	0.02	0.03	0.03	0.03	0.02	0.02	0.03	0.03	0.03
110	0.02	0.02	0.03	0.03	0.03	0.02	0.02	0.03	0.03	0.03	0.02	0.02	0.03	0.03	0.03
115	0.01	0.02	0.03	0.03	0.03	0.01	0.02	0.03	0.03	0.03	0.02	0.02	0.03	0.03	0.03
120	0.01	0.02	0.02	0.03	0.03	0.01	0.02	0.02	0.03	0.03	0.01	0.02	0.02	0.03	0.03
125											0.01	0.02	0.02	0.02	0.02
130											0.01	0.01	0.02	0.02	0.02
135											0.01	0.01	0.01	0.02	0.02
140											0.01	0.01	0.01	0.02	0.02
145											0.01	0.01	0.01	0.02	0.02
150											0.01	0.01	0.01	0.02	0.02
155											0.01	0.01	0.01	0.01	0.02
160											0.01	0.01	0.01	0.01	0.02
165											0.00	0.01	0.01	0.01	0.01
170											0.00	0.01	0.01	0.01	0.01
175											0.00	0.00	0.01	0.01	0.01
180											0.00	0.01	0.00	0.01	0.01
Total	**1.12**	**1.55**	**1.83**	**2.516**	**2.86**	**1.09**	**1.54**	**1.80**	**2.46**	**2.80**	**1.15**	**1.59**	**1.87**	**2.57**	**2.93**

***Time in minutes*
**Rainfall in inches*

Table 502C

CUHP Design Storm For Zone IIB - Incremental Rainfall Depth/Return Period

	Basins Less Than 5 Sq. Miles					Basins Between 5 and 10 Sq. Miles					Basins Between 10 and 20 Sq. Miles				
Time**	2-Yr*	5-Yr*	10-Yr*	50-Yr*	100-Yr*	2-Yr*	5-Yr*	10-Yr*	50-Yr*	100-Yr*	2-Yr*	5-Yr*	10-Yr*	50-Yr*	100-Yr*
5	0.02	0.02	0.03	0.03	0.03	0.02	0.02	0.03	0.03	0.03	0.02	0.02	0.03	0.03	0.03
10	0.03	0.04	0.05	0.07	0.07	0.03	0.04	0.05	0.08	0.07	0.03	0.04	0.05	0.07	0.07
15	0.07	0.10	0.11	0.10	0.10	0.07	0.10	0.11	0.12	0.10	0.07	0.10	0.11	0.10	0.10
20	0.14	0.18	0.21	0.15	0.18	0.13	0.17	0.20	0.19	0.18	0.12	0.16	0.19	0.15	0.18
25	0.21	0.30	0.35	0.28	0.31	0.20	0.29	0.33	0.34	0.30	0.19	0.27	0.31	0.26	0.28
30	0.12	0.15	0.17	0.46	0.55	0.11	0.15	0.16	0.56	0.53	0.11	0.14	0.15	0.43	0.50
35	0.05	0.07	0.08	0.22	0.31	0.05	0.07	0.08	0.24	0.30	0.05	0.07	0.08	0.21	0.28
40	0.04	0.05	0.06	0.15	0.18	0.04	0.05	0.06	0.19	0.18	0.04	0.05	0.06	0.15	0.18
45	0.03	0.04	0.05	0.10	0.14	0.03	0.04	0.05	0.12	0.14	0.03	0.04	0.05	0.10	0.14
50	0.03	0.04	0.04	0.10	0.11	0.03	0.04	0.04	0.12	0.11	0.03	0.04	0.04	0.10	0.11
55	0.03	0.04	0.04	0.06	0.09	0.03	0.04	0.04	0.07	0.09	0.03	0.04	0.04	0.06	0.09
60	0.03	0.04	0.04	0.06	0.09	0.03	0.04	0.04	0.07	0.09	0.03	0.04	0.04	0.06	0.09
65	0.03	0.04	0.04	0.06	0.09	0.03	0.04	0.04	0.07	0.09	0.03	0.04	0.04	0.06	0.09
70	0.02	0.04	0.04	0.05	0.04	0.02	0.04	0.04	0.06	0.04	0.02	0.04	0.04	0.05	0.04
75	0.02	0.03	0.04	0.05	0.04	0.02	0.03	0.04	0.06	0.04	0.02	0.03	0.04	0.05	0.04
80	0.02	0.03	0.03	0.03	0.03	0.02	0.03	0.03	0.04	0.03	0.02	0.03	0.03	0.03	0.03
85	0.02	0.03	0.03	0.03	0.03	0.02	0.03	0.03	0.04	0.03	0.02	0.03	0.03	0.03	0.03
90	0.02	0.03	0.03	0.03	0.03	0.02	0.03	0.03	0.03	0.03	0.02	0.03	0.03	0.03	0.03
95	0.02	0.03	0.03	0.03	0.03	0.02	0.03	0.03	0.03	0.03	0.02	0.03	0.03	0.03	0.03
100	0.02	0.02	0.03	0.03	0.03	0.02	0.02	0.03	0.03	0.03	0.02	0.02	0.03	0.03	0.03
105	0.02	0.02	0.03	0.03	0.03	0.02	0.02	0.03	0.03	0.03	0.02	0.02	0.03	0.03	0.03
110	0.02	0.02	0.03	0.03	0.03	0.02	0.02	0.03	0.03	0.03	0.02	0.02	0.03	0.03	0.03
115	0.01	0.02	0.02	0.03	0.03	0.01	0.02	0.02	0.03	0.03	0.01	0.02	0.02	0.03	0.03
120	0.01	0.02	0.02	0.03	0.03	0.01	0.02	0.02	0.03	0.03	0.01	0.02	0.02	0.03	0.03
125											0.01	0.01	0.02	0.02	0.02
130											0.01	0.01	0.02	0.02	0.02
135											0.01	0.01	0.02	0.02	0.02
140											0.01	0.01	0.01	0.02	0.02
145											0.01	0.01	0.01	0.01	0.02
150											0.01	0.01	0.01	0.01	0.01
155											0.01	0.01	0.01	0.01	0.01
160											0.00	0.01	0.01	0.01	0.01
165											0.00	0.01	0.01	0.01	0.01
170											0.00	0.00	0.01	0.01	0.01
175											0.00	0.00	0.01	0.01	0.01
180											0.00	0.00	0.01	0.01	0.01
Total	**1.03**	**1.40**	**1.60**	**2.21**	**2.60**	**1.00**	**1.38**	**1.56**	**2.61**	**2.56**	**1.05**	**1.43**	**1.67**	**2.31**	**2.66**

***Time in minutes*
**Rainfall in inches*

Table 502D

CUHP Design Storm For Zone III - Incremental Rainfall Depth/Return Period

	Basins Less Than 5 Sq. Miles					Basins Between 5 and 10 Sq. Miles					Basins Between 10 and 20 Sq. Miles				
Time**	2-Yr*	5-Yr*	10-Yr*	50-Yr*	100-Yr*	2-Yr*	5-Yr*	10-Yr*	50-Yr*	100-Yr*	2-Yr*	5-Yr*	10-Yr*	50-Yr*	100-Yr*
5	0.01	0.02	0.03	0.02	0.02	0.01	0.02	0.03	0.02	0.02	0.01	0.02	0.03	0.02	0.02
10	0.03	0.04	0.05	0.06	0.06	0.03	0.04	0.05	0.06	0.06	0.03	0.04	0.05	0.06	0.06
15	0.06	0.09	0.10	0.19	0.09	0.06	0.09	0.10	0.09	0.09	0.06	0.09	0.10	0.09	0.09
20	0.12	0.16	0.19	0.14	0.16	0.11	0.16	0.18	0.14	0.16	0.11	0.14	0.17	0.14	0.16
25	0.18	0.27	0.32	0.27	0.29	0.18	0.26	0.31	0.26	0.28	0.16	0.24	0.29	0.24	0.26
30	0.10	0.14	0.15	0.45	0.52	0.10	0.13	0.14	0.43	0.50	0.09	0.13	0.14	0.41	0.47
35	0.05	0.06	0.07	0.21	0.29	0.05	0.06	0.07	0.20	0.28	0.05	0.06	0.07	0.19	0.26
40	0.04	0.05	0.05	0.14	0.16	0.04	0.05	0.05	0.14	0.16	0.04	0.05	0.05	0.14	0.16
45	0.02	0.04	0.05	0.09	0.13	0.02	0.04	0.05	0.09	0.13	0.02	0.04	0.05	0.09	0.13
50	0.02	0.04	0.04	0.09	0.10	0.02	0.04	0.04	0.09	0.10	0.02	0.04	0.04	0.09	0.10
55	0.02	0.03	0.04	0.06	0.08	0.02	0.03	0.04	0.06	0.08	0.02	0.03	0.04	0.06	0.08
60	0.02	0.03	0.04	0.06	0.08	0.02	0.03	0.04	0.06	0.08	0.02	0.03	0.04	0.06	0.08
65	0.02	0.03	0.04	0.06	0.08	0.02	0.03	0.04	0.06	0.08	0.02	0.03	0.04	0.06	0.08
70	0.01	0.03	0.04	0.04	0.04	0.01	0.03	0.04	0.04	0.04	0.01	0.03	0.04	0.04	0.04
75	0.01	0.03	0.04	0.04	0.04	0.01	0.03	0.04	0.04	0.04	0.01	0.03	0.04	0.04	0.04
80	0.01	0.02	0.03	0.03	0.02	0.01	0.02	0.03	0.03	0.02	0.01	0.02	0.03	0.03	0.02
85	0.01	0.02	0.02	0.03	0.02	0.01	0.02	0.02	0.03	0.02	0.01	0.02	0.02	0.03	0.02
90	0.01	0.02	0.02	0.03	0.02	0.01	0.02	0.02	0.03	0.02	0.01	0.02	0.02	0.03	0.02
95	0.01	0.02	0.02	0.03	0.02	0.01	0.02	0.02	0.03	0.02	0.01	0.02	0.02	0.03	0.02
100	0.01	0.02	0.02	0.03	0.02	0.01	0.02	0.02	0.03	0.02	0.01	0.02	0.02	0.03	0.02
105	0.01	0.02	0.02	0.03	0.02	0.01	0.02	0.02	0.03	0.02	0.01	0.02	0.02	0.03	0.02
110	0.01	0.02	0.02	0.03	0.02	0.01	0.02	0.02	0.03	0.02	0.01	0.02	0.02	0.03	0.02
115	0.01	0.02	0.02	0.03	0.02	0.01	0.02	0.02	0.03	0.02	0.01	0.02	0.02	0.03	0.02
120	0.01	0.01	0.02	0.03	0.02	0.01	0.01	0.02	0.03	0.02	0.01	0.01	0.02	0.03	0.02
125											0.01	0.01	0.01	0.01	0.02
130											0.01	0.01	0.01	0.01	0.01
135											0.01	0.01	0.01	0.01	0.01
140											0.01	0.01	0.01	0.01	0.01
145											0.01	0.01	0.01	0.01	0.01
150											0.01	0.01	0.01	0.01	0.01
155											0.01	0.01	0.01	0.01	0.01
160											0.01	0.01	0.01	0.01	0.01
165											0.01	0.01	0.01	0.01	0.01
170											0.00	0.00	0.01	0.01	0.01
175											0.00	0.00	0.00	0.01	0.01
180											0.00	0.00	0.00	0.00	0.01
Total	**0.80**	**1.23**	**1.44**	**2.09**	**2.32**	**0.79**	**1.21**	**1.41**	**2.05**	**2.28**	**0.85**	**1.26**	**1.48**	**2.11**	**2.34**

***Time in minutes*
**Rainfall in inches*

Table 503

Time-Intensity-Frequency Tabulation

Duration		5 Min		10 Min		15 Min		30 Min		60 Min	
Duration Factors		0.29		0.45		0.57		0.79		1.00	
County Zone	Frequency	Depth**	Intensity*	Depth**	Intensity*	Depth**	Intensity*	Depth**	Intensity*	Depth**	Intensity*
Jefferson I	2-Yr	0.30	3.55	0.46	2.75	0.58	2.33	0.81	1.61	1.02	1.02
	5-Yr	0.41	4.94	0.64	3.83	0.81	3.24	1.12	2.24	1.42	1.42
	10-Yr	0.49	5.85	0.76	4.54	0.96	3.83	1.33	2.65	1.68	1.68
	50-Yr	0.67	8.07	1.04	6.26	1.32	5.29	1.83	3.67	2.32	2.32
	100-Yr	0.77	9.26	1.20	7.18	1.52	6.06	2.10	4.20	2.66	2.66
Jefferson IIA	2-Yr	0.28	3.31	0.43	2.57	0.54	2.17	0.75	1.50	0.95	0.95
	5-Yr	0.39	4.63	0.60	3.59	0.76	3.03	1.05	2.10	1.33	1.33
	10-Yr	0.46	5.46	0.71	4.24	0.89	3.58	1.24	2.48	1.57	1.57
	50-Yr	0.63	7.55	0.98	5.86	1.24	4.95	1.71	3.43	2.17	2.17
	100-Yr	0.72	8.63	1.12	6.70	1.41	5.65	1.96	3.92	2.48	2.48
Jefferson IIB	2-Yr	0.25	2.96	0.38	2.30	0.48	1.94	0.67	1.34	0.85	0.85
	5-Yr	0.35	4.14	0.54	3.21	0.68	2.71	0.94	1.88	1.19	1.19
	10-Yr	0.40	4.84	0.63	3.75	0.79	3.17	1.10	2.20	1.39	1.39
	50-Yr	0.56	6.72	0.87	5.21	1.10	4.40	1.52	3.05	1.93	1.93
	100-Yr	0.64	7.66	0.99	5.94	1.25	5.02	1.74	3.48	2.20	2.20
Jefferson III	2-Yr	0.21	2.54	0.33	1.97	0.42	1.66	0.58	1.15	0.73	0.73
	5-Yr	0.31	3.69	0.48	2.86	0.60	2.42	0.84	1.67	1.06	1.06
	10-Yr	0.37	4.38	0.57	3.40	0.72	2.87	1.00	1.99	1.26	1.26
	50-Yr	0.52	6.23	0.81	4.83	1.02	4.08	1.41	2.83	1.79	1.79
	100-Yr	0.60	7.17	0.93	5.56	1.17	4.70	1.63	3.25	2.06	2.06

***Depth in Inches*
**Intensity/hour*

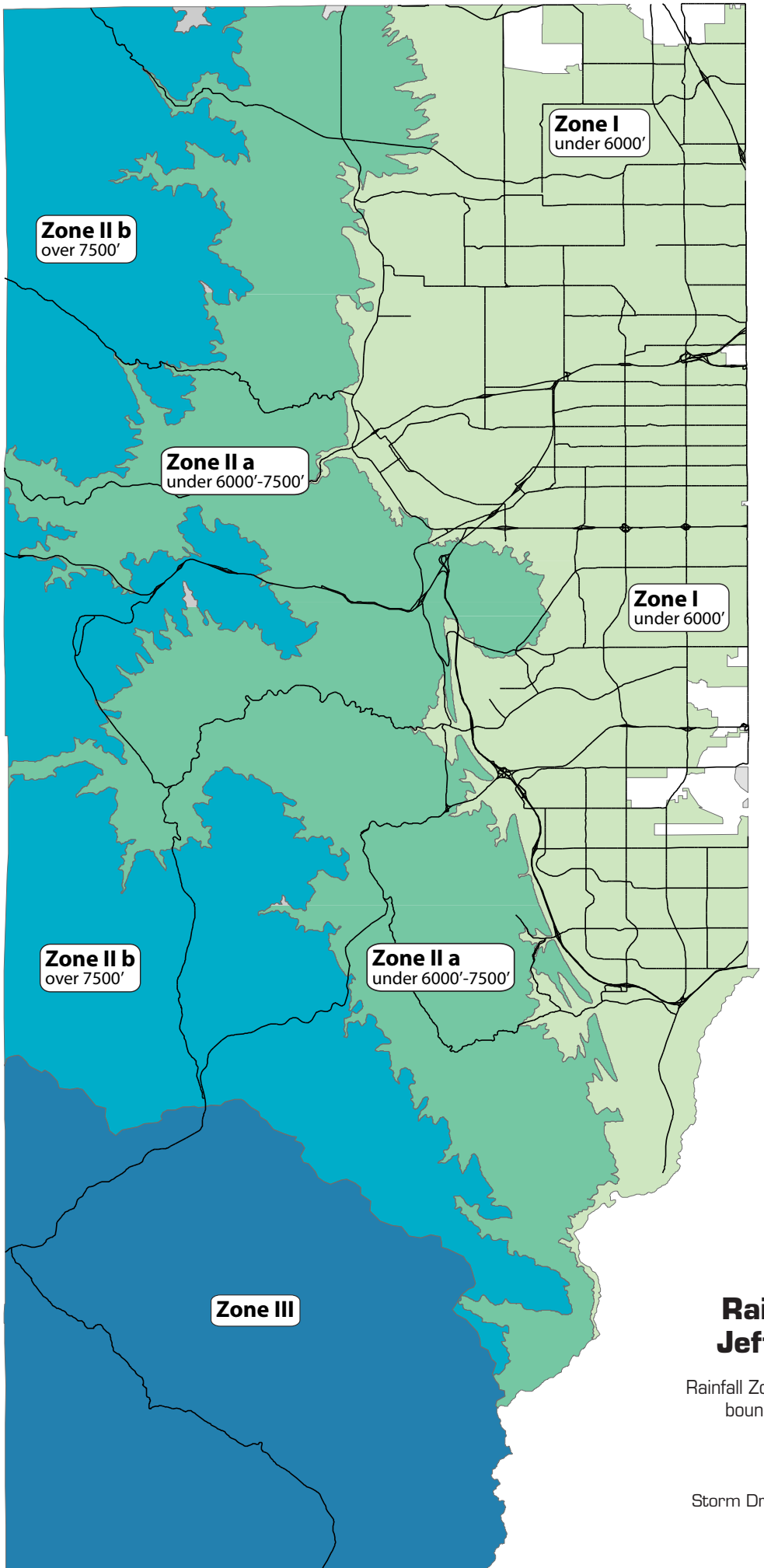

Figure 501

Rainfall Zones in Jefferson County

Rainfall Zone III extends to the southern boundary of Jefferson County.

Time-Intensity Frequency Curves

Figure 502A
Zone I

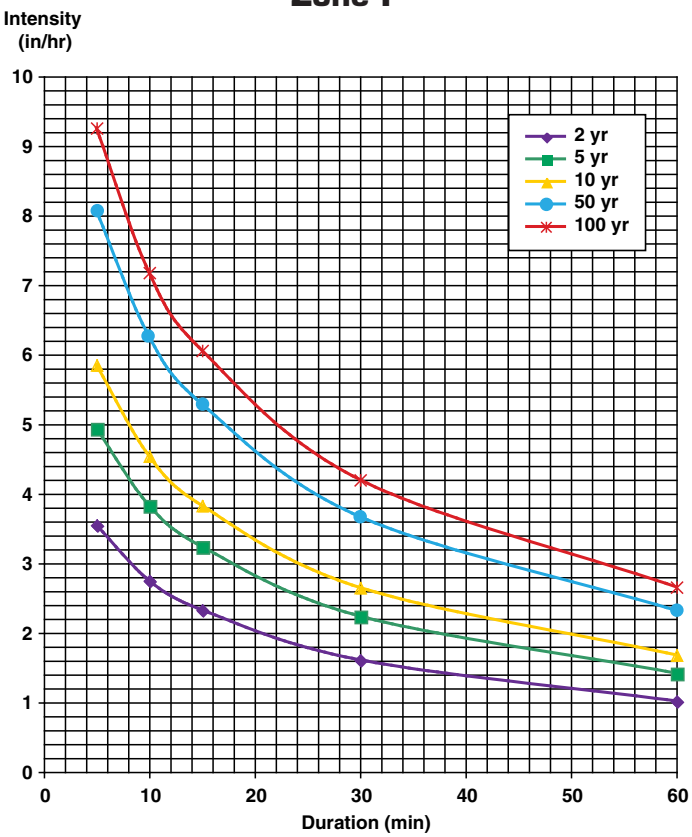

Figure 502B
Zone IIA

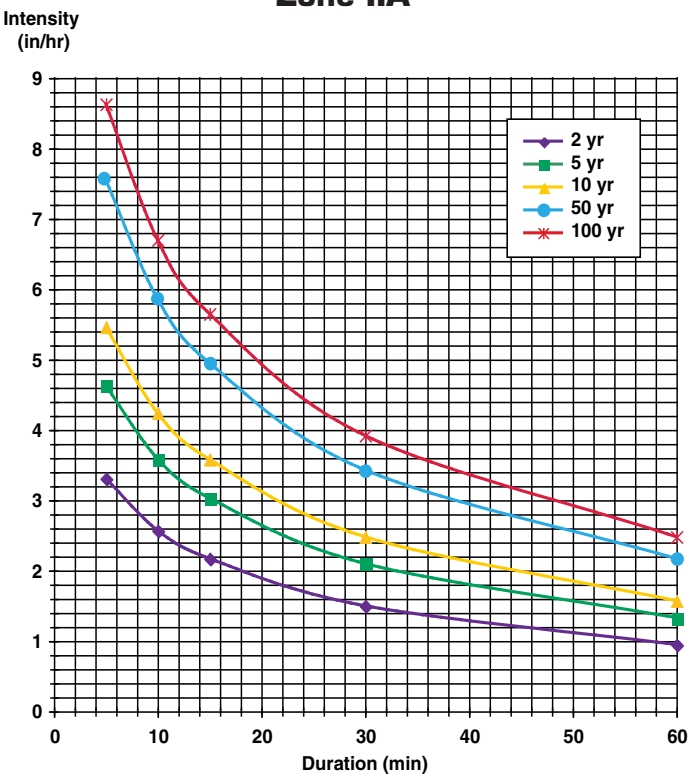

Figure 502C
Zone IIB

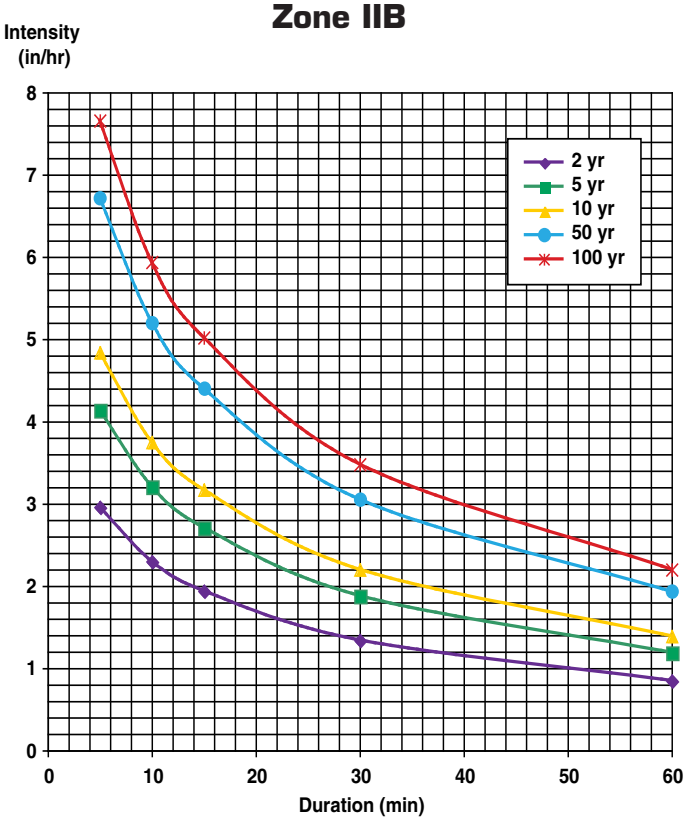

Figure 502D
Zone III

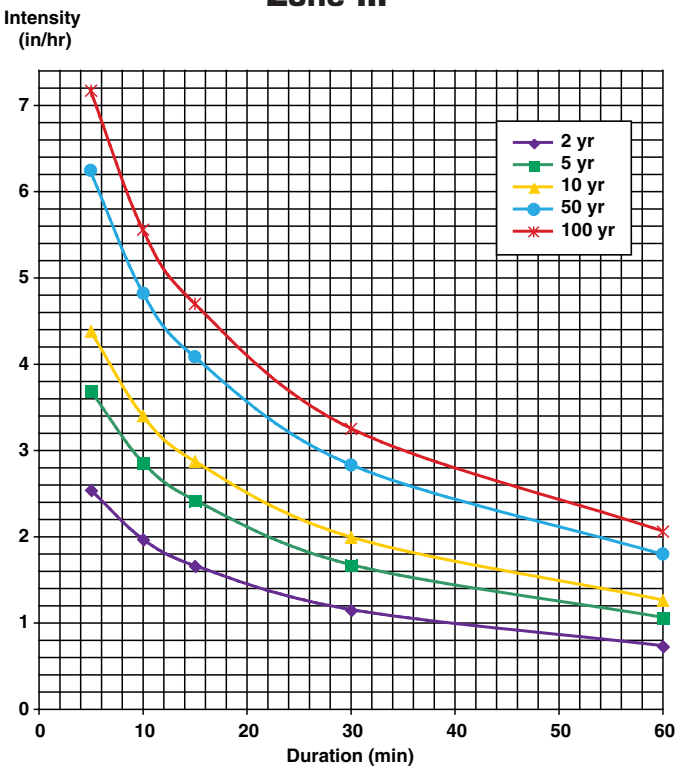

Chapter 6 - Runoff

6.1 Introduction

This chapter presents the criteria and methodology for determining the storm runoff design peaks and volumes to be used in the County in the preparation of storm drainage studies, plans and facility design. The details of the rainfall/runoff models are presented in the ***Manual***. The specific input data requirements and modifications to the procedures are presented in this chapter.

6.2 Rational Method

The Rational Method, in widespread use in the Denver Region, will continue to be utilized for the sizing of storm sewers and for determining runoff magnitude from unsewered areas. The limit of application of the Rational Method is approximately 160 acres. It has been concluded that, for tributary basins in excess of 160 acres, the cost of the drainage works justifies significantly more study, thought and judgment on the part of the engineer than is permitted by the Rational Method. When the urban drainage basin exceeds 160 acres, the CUHP method represents better practice and will be used.

The procedures for the Rational Method, as explained in the ***Manual***, Volume1, "Runoff", will be followed in the preparation of drainage reports and storm drainage facility designs in the County.

Standard forms and spreadsheets are available in the ***Manual***. The most current versions of these software programs may be obtained through the District's web site (www.udfcd.org) or you can use the standard forms for the calculation of Time of Concentration and Storm Drainage System Design which have been provided at the end of these ***Criteria***.

6.3 Colorado Urban Hydrograph Procedure

CUHP was originally developed for the Denver area at the time the ***Manual*** was prepared. The method may be used for basins as small as five acres. However, CUHP is required for watershed areas larger than 160 acres. The procedures for CUHP, as explained in the ***Manual*** will be followed in the preparation of drainage reports and storm drainage facility designs in the County. The design storms to be used with the CUHP method are presented in Tables 502A-D.

6.4 Storm Flow Analysis

When determining the design storm flows, the engineer should follow particular criteria and guidelines to assure that minimum design standards and uniformity of drainage solutions are maintained throughout the County. The information presented herein will be used by the engineer in the development of design storm runoff.

6.4.1 Onsite Flow Analysis

When analyzing the flood peaks and volumes, the engineer should use the proposed fully developed land use plan to determine runoff coefficients. In addition, the engineer should take into consideration the changes in flow patterns (from the undeveloped site conditions) caused by the proposed street alignments. When evaluating surface flow times, the proposed lot grading will be used to calculate the time of concentration or the CUHP parameters.

6.4.2 Offsite Flow Analysis

The analysis of offsite runoff is dependent on the development status and whether the tributary offsite area lies within a major drainageway basin as defined in Section 3.2.3. In all cases, the minor system is designed for the fully developed minor storm runoff (Section 3.4.1) without the benefits of onsite detention. In some cases credit is given for detention for the design of the major system (Section 3.3.12).

6.4.2.1 Tributary Area Within a Major Drainageway Basin

(a) Where the offsite area is undeveloped, the runoff will be calculated assuming the basin is fully developed as defined by Planning and Zoning. If this information is not available, then the runoff will be calculated using the coefficients defined in Table RO-3 and Table RO-5 of the ***Manual***. The most current versions of these software programs may be obtained through the District's web site (www.udfcd.org). No credit will be given for onsite detention in the offsite area for any design frequency.

(b) Where the offsite area is fully or partially developed, the storm runoff will be based upon the existing platted land uses and topographic features. No credit will be given for onsite detention in the offsite area for any design frequency.

6.4.2.2 Tributary Area Not Within a Major Drainageway Basin

(a) Where the offsite area is undeveloped, the minor system runoff will be calculated assuming the basin is fully developed as defined by Planning and Zoning. If this information is not available, then the runoff will be calculated using the coefficients defined in Table RO-3 and Table RO-5 of the ***Manual***. The most current versions of these software programs may be obtained through the District's web site (www.udfcd.org). The major system runoff (i.e., 10-year and 100-year) may be calculated assuming the historic runoff rates computed in accordance with procedures described in Chapter 14 of these ***Criteria***.

(b) Where the offsite area is fully or partially developed, the storm runoff will be based on the existing platted land uses and topographic features, unless onsite detention in the offsite area has been constructed and accepted by the County. However, no credit will be given for onsite detention in the offsite area for the minor system design, unless otherwise approved by Planning and Zoning.

Chapter 7 - Open Channels

7.1 Introduction

This chapter addresses the technical criteria for the hydraulic evaluation and hydraulic design of open channels in the County. The information presented herein is considered to be a minimum standard. In many instances, special design or evaluation techniques will be required. Except as modified herein, all open channel criteria will be in accordance with the ***Manual*** and *Open Channel Hydraulics, Chow*, Ven T., McGraw-Hill, Inc., New York, New York, 1959

7.2 Channel Types

The channels in the County area are defined as natural or artificial. Natural channels include all water courses that have occurred naturally by the erosion process such as Clear Creek, Bear Creek, South Platte River, Ralston Creek, Dutch Creek, Van Bibber Creek, Big Dry Creek and Lena Gulch. Artificial channels are those constructed or developed by human effort.

7.2.1 Natural Channels

The hydraulic properties of natural channels vary along the channel reach and can be either controlled to the extent desired or altered to meet given requirements. The initial decision to be made regarding natural channels is whether or not the channel is to be protected from erosion due to high velocity flows, or protected from excessive silt deposition due to low velocities.

Many natural channels in urbanized and to-be-urbanized areas have mild slopes, are reasonably stable and are not in a state of serious degradation or aggradation. However, if a natural channel is to be used for carrying storm runoff from an urbanized area, the altered nature of the runoff peaks and volumes from urban development will cause erosion. Detailed hydraulic analysis will be required for natural channels in order to identify the erosion tendencies. Some onsite modifications of the natural channel, such as grade control structures, may be required to assure a stabilized condition.

The investigations necessary to assure that the natural channels will be adequate are different for every waterway. The engineer must prepare cross sections of the channel, define the water surface profile for the minor and major design flood, investigate the bed and bank material to determine erosion tendencies and study the bank slope stability of the channel under future conditions of flow. Supercritical flow does not normally occur in natural channels, but calculations must be made to assure that the results do no reflect supercritical flow.

7.2.2 Grass Lined Channels

Grass lined channels are the most desirable of the artificial channels. The grass will stabilize the body of the channel, consolidate the soil mass of the bed, check the erosion on the channel surface and control the movement of soil particles along the channel bottom. The channel storage, the lower velocities and the greenbelt multiple-use benefits obtained create significant advantages over other artificial channels.

The presence of grass in channels creates turbulence which results in loss of energy and increased flow retardance. Therefore, the designer must give full consideration to sediment deposition and to scour, as well as hydraulics. Unless existing development within the County restricts the availability of ROW, only channels lined with grass will be considered acceptable for major drainageways.

For the purposes of these ***Criteria***, sandy soils are defined as non-cohesive sands classified as SW, SP or SM in accordance with the Unified Soil Classification System.

7.2.3 Composite Channels

Composite channels are a type of grass-lined channel with a distinct low-flow channel that is vegetated with a mixture of wetland and riparian species. Design of composite channels will be in accordance with the ***Manual***.

7.2.4 Bioengineered Channels

Bioengineered channels are a type of grass-lined channel that utilize vegetative components and other natural materials in combination with structural measures to construct natural-like channels that are stable and resistant to erosion. Design of bioengineered channels will be in accordance with the ***Manual***.

7.2.5. Concrete Lined Channels

Concrete lined channels for major drainageways will be permitted only where ROW restrictions within existing development prohibit grass lined channels or any other channel lining type. The lining must be designed to withstand the various forces and actions which tend to overtop the bank, deteriorate the lining, erode the soil beneath the lining and erode unlined areas, especially for the supercritical flow conditions.

If the project constraints suggest the use of a concrete channel for a major drainageway, the applicant will present the concept with justification to Planning and Zoning for consideration of a waiver from these ***Criteria***. The design of concrete lined channels will be in accordance with the ***Manual***.

A Design Report is required for approval of a concrete lined channel. The contents of such report will be determined by Planning and Zoning. On the as-built drawings, the engineer will be required to certify that the concrete used in the lining was tested and meets the accepted specifications.

7.2.6. Rock Lined Channels

Riprap lined channels are generally discouraged and will be permitted only in areas of existing development where ROW for major drainageways is limited and such limitation prohibits the use of grass lined channels. The advantage of rock lining a channel is that a steeper channel grade and steeper side slopes can be used. Rock linings (i.e., revetments) are permitted as a means of controlling erosion for natural channels. The disadvantages are the large initial cost of construction and the high maintenance costs due to vandalism.

If the project constraints suggest the use of riprap lining for a major drainageway, then the engineer must present the concept, with justification, to Planning and Zoning for consideration of a waiver from these ***Criteria***. The design of rock-lined channels will be in accordance with the ***Manual***.

7.3 Flow Computation

Uniform flow and critical flow computations will be in accordance with the ***Manual***.

7.4 Design Standards For Major Drainageways

These standards cover the design of major drainageways as defined by the policy of Section 3.2.3. The design standards for open channels cannot be presented in a step-by-step fashion because of the wide range of design options available to the design engineer. Certain planning and conceptual design criteria are particularly useful in the preliminary design of a channel. These ***Criteria***, which have the greatest effect on the performance and cost of the channel, are discussed below.

7.4.1 Natural Channels

The design criteria and evaluation techniques for natural channels are:

1. The channel and overbank areas will have adequate capacity for the 100-year storm runoff.
2. Natural channel segments which have a calculated Froude number greater than 0.95 for the 100-year flood peak will be protected from erosion.
3. The water surface profiles will be defined so that the floodplain can be zoned and protected.
4. Filling of the Floodplain Overlay District reduces valuable channel storage capacity and tends to increase downstream runoff peaks.
5. Roughness factors (n), which are representative of unmaintained channel conditions, will be used for the analysis of water surface profiles.
6. Roughness factors (n), which are representative of maintained channel conditions, will be used to determine velocity limitations.

7. Structures may be required to control erosion for both the major and the minor storm runoff and should appear as natural features by imitating surrounding vegetation and natural materials. Where possible, locate structures at principal grade changes to minimize cost of retaining structures, reduce perceived scale and appearance of mass and bulk and use existing land forms of the site. All check drops, dams or structures should, whenever feasible, use natural materials to integrate with natural landscape characteristics.

8. Plan and profile drawings of the floodplain will be prepared. Appropriate allowances for known future bridges or culverts, which can raise the water surface profile and cause the floodplain to be extended, will be included in the analysis. The applicant will contact Planning and Zoning for information on future bridges and culverts.

9. Preserve, maintain or enhance natural waterway channel boundaries and alignment in their natural condition as landscape and visual amenities, focal points for development projects and to help define "edges" in and around communities. Preserve vegetation groups, rock outcroppings, terrain form, soil, waterways and bodies of water.

With most natural waterways, erosion control structures should be constructed at regular intervals to decrease the thalweg slope and to control erosion. However, these channels should be left in as near a natural condition as possible. For that reason, extensive modifications should not be undertaken unless they are found to be necessary to avoid excessive erosion with subsequent deposition downstream.

The usual rules of freeboard depth, curvature and other rules which are applicable to artificial channels, do not apply for natural channels. All structures constructed along the channel will be elevated a minimum of one foot above the 100-year water surface. There are significant advantages which may occur if the designer incorporates into his planning the overtopping of the channel and localized flooding of adjacent areas which are laid out and developed for the purpose of being inundated during the major runoff peak.

If a natural channel is to be utilized as a major drainageway for a development, then the applicant will meet with Planning and Zoning to discuss the concept and to obtain the requirements for planning and design documentation. Approval of the concept and design will be made in accordance with the requirements of Chapter 2 of these ***Criteria***.

7.4.2 Grass Lined Channels

Key parameters in grass lined channel design include velocity, slopes, roughness coefficients, depth, freeboard, curvature, cross section shape and lining materials. Other factors such as water surface profile computation, erosion control, drop structures and transitions also play an important role. A discussion of these parameters is presented below.

1. Flow Velocity

The maximum normal depth velocity for the 100-year flood peak will not exceed 5.0 feet per second for grass lined channels. The Froude number (turbulence factor) will be less than 0.8 for grass lined channels. Grass lined channels having a Froude number greater than 0.8 are not permitted. The minimum velocity, wherever possible, will be greater than 2.0 feet per second for the minor storm runoff.

2. Longitudinal Channel Slopes

Grass lined channel slopes are dictated by velocity and Froude number requirements. Where the natural topography is steeper than desirable, drop structures will be utilized to maintain design velocities and Froude numbers.

3. Freeboard

Except where localized overflow in certain areas is desirable for additional ponding benefits or other reasons, the freeboard for the 100-year flow will be as follows:

$$HFB = 0.5 + \frac{V^2}{2g}$$

where

HFB = freeboard height (feet)

V = average channel velocity (fps)

g = acceleration of gravity = 32.2 ft/sec^2

The minimum freeboard will be 1.0 foot.

4. Curvature (Horizontal)

The center line curvature will have a radius twice the top width of the design flow but not less than 100 feet.

5. Roughness Coefficient

The variation of Manning's "n" with the retardance and the product of mean velocity and hydraulic radius, as presented in Figure 701, will be used in the capacity computation.

Retardance curve C will be used to determine the channel capacity, since a mature channel (i.e., substantial vegetation with minimal pervious maintenance) will have a higher Manning's "n" value. However, a recently constructed channel will have minimal vegetation and the retardance will be less than the mature channel. Therefore, retardance curve D will be used to determine the limiting velocity in a channel.

6. Cross Sections

The channel shape may be almost any type suitable to the location and to the environmental conditions. Often the shape can be chosen to suit open space and recreational needs. The limitations within which the design must fall for the major storm design flow include:

a. Trickle Channel

The base flow will be carried in a trickle channel except for sandy soils (see Section 7.2.2). The minimum capacity will be 1.0 percent to 3.0 percent of the 100-year flow but not less than 1 cfs. Trickle channels will be constructed of concrete or other approved materials to minimize erosion, to facilitate maintenance and to aesthetically blend with the adjacent vegetation and soils. Recommended trickle channel sections are presented on Figure 703. The minimum trickle channel width will be four feet.

An alternative trickle channel treatment is of greater capacity with natural bottom and appropriate riparian vegetation types and mix along edges to reduce erosion and create wetland area. Channel alignment should vary in character with a meandering quality. Drop structures should be included where necessary and appear as natural features.

b. Main Channel

A main channel is required for sandy soils. The side slopes must be 4:1 or flatter. The depth of the main channel is not included in the normal depth limitation. A main channel can also be used for non-sandy soils.

c. Bottom Width

The minimum bottom width will be consistent with the maximum depth and velocity criteria. The minimum bottom width will be four feet or the trickle channel width when trickle channel is required.

d. Easement/ROW Width

The minimum easement/ROW width will include freeboard and a 12-foot wide maintenance access road.

e. Flow Depth

The maximum design depth of flow (outside the trickle channel area and main channel area for sandy soils) for the 100-year flood peak will be limited to 5.0 feet in grass lined channels.

f. Maintenance Access Road

A maintenance access road will be provided along the entire length of all major drainageways with a minimum width of 12 feet. The County may require the road to be surfaced with six inches of Class 2 road base or concrete slab.

g. Side Slopes

Main channel side slopes will be 4 (horizontal) to 1 (vertical) or flatter.

7. Vegetation

The grass lining for channels will be in accordance with the ***Manual***.

Vegetation and landform variations are encouraged to enhance the aesthetic quality within channels as long as the functional factors mentioned below are not compromised. It is recognized that channel capacity will be increased to accommodate an increase in plant material types and densities and variation of landform. Overstory canopy trees are allowed outside of high hazard areas.

If extensive modification or disruption is necessary, rehabilitate channel corridor to conform to or improve upon predevelopment conditions. The stream form and vegetative character should appear as it would occur under long-term natural processes. Alternative techniques that can be used to achieve these include: varying the slope and edge of channel; the use of river rock for riprap; replanting appropriately sized riparian vegetation; and introducing meandering character on flat areas and pools and rocks in steeper areas. A concentration of plant materials should be included where drainages intersect arterial streets, when feasible, to maintain and enhance visual access from roadways.

The distance on each side of any flowing or intermittent stream channel should be large enough to ensure its use as an active and passive recreational and visual amenity.

8. Erosion Control

The requirements for erosion control for grass lined channels will be as defined in the ***Manual***, The design of conduit outlet structures will be in accordance with the ***Manual***.

9. Water Surface Profiles

Computation of the water surface profile will be presented for all open channels utilizing standard backwater methods, taking into consideration losses due to changes in velocity of channel cross section, drops, waterway openings or obstructions. The energy gradient will be shown on all drawings.

7.5 Design Standards For Small Drainageways

These standards cover the design of channels that are not classified as a major drainageway in accordance with the policy of Section 3.2.3. Additional flexibility and less stringent standards are allowed for small drainageways.

7.5.1 Natural Channels

The design criteria and evaluation techniques for natural channels are:

1. The channel and overbank areas will have adequate capacity for the 100-year storm runoff.

2. Natural channel segments which have a calculated Froude number greater than 0.95 for the 100-year flood peak will be protected from erosion.

3. Roughness factors (n), which are representative of unmaintained channel conditions, will be used for the analysis of water surface profiles.

4. Roughness factors (n), which are representative of maintained channel conditions, will be used to determine velocity limitations.

5. Erosion control structures, such as check drops or check dams, may be required to control flow velocities, including the minor storm runoff.

6. Plan and profile drawings will be prepared showing the 100-year water surface profile, floodplain and details of erosion protection, if required.

7.5.2 Grass Lined Channels

Key parameters in grass lined channel design include velocity, slopes, roughness coefficients, depth, freeboard, curvature, cross section shape and lining materials. Other factors such as water surface profile computation, erosion control, drop structures and transitions also play an important role. A discussion of these parameters is presented below.

1. Flow Velocity

The maximum normal depth velocity for the 100-year flood peak will not exceed 7.0 feet per second for grass lined channels (see Section 7.2.2). The Froude number (turbulence factor) will be less than 0.8 for grass lined channels. Grass lined channels having a Froude number greater than 0.8 are not permitted. The minimum velocity, wherever possible, will be greater than 2.0 feet per second for the minor storm runoff.

2. Longitudinal Channel Slopes

Grass lined channel slopes are dictated by velocity and Froude number requirements. Where the natural topography is steeper than desirable, drop structures will be utilized to maintain design velocities and Froude numbers.

3. Freeboard

A minimum freeboard of 1 foot will be included in the design for the 100-year flow. For swales (i.e., small drainageways with a 100-year flow less than 20 cfs), the minimum freeboard requirements are 6 inches.

4. Curvature (Horizontal)

The centerline curvature will have a minimum radius twice the top width of the design flow but not less than 50 feet. The minimum radius for channels with a 100-year runoff of 20 cfs or less will be 25 feet.

5. Roughness Coefficient

The variation of Manning's "n" with the retardance (curve "C") and the product of mean velocity and hydraulic radius, as presented in Figure 701, will be used in the computation of capacity and velocity.

6. Cross Sections

The channel shape may be almost any type suitable to the location and to the environmental conditions. The section may also be simple V-Section for swales (i.e., Q100 less than 20 cfs). The limitations on the cross section are as follows:

a. Trickle Channel

The base flow (except for swales) will be carried in a trickle channel for non-sandy soils. The minimum capacity will be from 1.0 percent to 3.0 percent of the 100-year flow but not less than 1 cfs. The trickle channel can be constructed of concrete, rock, cobbles or other suitable materials. For sandy soils, a main channel is required in accordance with Section 7.4.2.6(b). Factors to be considered when establishing the need for trickle channels are: drainage slope, soil type and upstream impervious area. For 100-year runoff peaks of 20 cfs or less, trickle channel requirements will be evaluated for each case. Trickle channels help preserve swales crossing residential property.

b. Easement/ROW Width

The minimum easement/ROW width will include freeboard and should include a maintenance access.

c. Flow Depth

The maximum design depth of flow (outside the trickle channel area and main channel area for sandy soils) for the 100-year flood peak will be limited to 5 feet in grass lined channels.

d. Side Slopes

Main channel side slopes will be 4 (horizontal) to 1 (vertical) or flatter. Side slopes for channels with 100-year runoff peaks of 20 cfs or less will be 3 (horizontal) to 1 (vertical) or flatter.

7. Grass Lining

The grass lining for channels will be in accordance with the ***Manual***.

8. Erosion Control

The requirements for erosion control for grass lined channels will be as defined in the ***Manual***. The design of conduit outlet structures will be in accordance with the ***Manual***.

9. Hydraulic Information

Calculations of the capacity, velocity and Froude numbers will be submitted with the construction drawings.

10. Design Example

Grass-lined channel for a watershed area under 130 acres in area.

100-year flow = 30 cfs
Slope = 2%
Side Slopes = 4:1

Find the minimum easement width and the required open channel cross-section.

Channel Cross Section

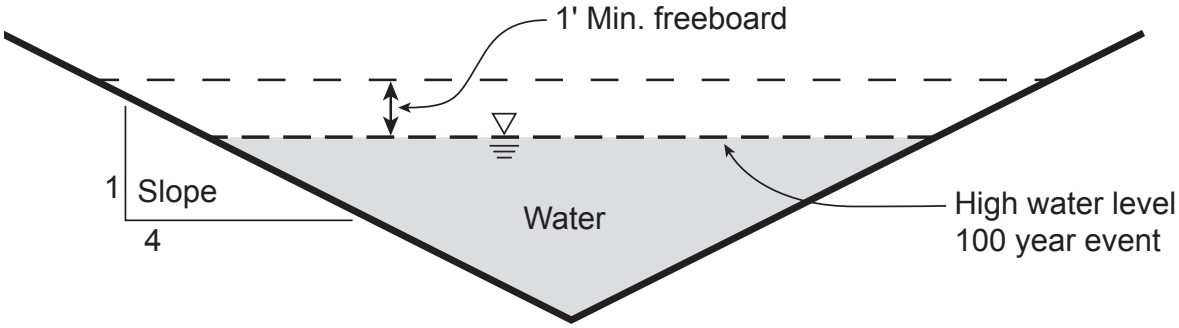

Step 1: (Determine Manning' n for both the (C) and (V) curves)

To determine the Manning's n, Figure 701 will be used. To find the V*R-value, an estimated value will have to be used to start the process. We will estimate that V*R is about 2, which would give us a Manning's n of .05. If this estimated number is not between the (V) and (C) curves, the calculations will need to be run with the Manning's n that is computed from the graph. Using the Manning's equation Q= 1.49/n (AR2/3S1/2), the following information is obtained:

Normal Depth = 1.49'
Velocity (V) = 3.38 feet/sec
Hydraulic Radius (R) = .722
V*R = 2.44

Manning's n (V) = .043
Manning's n (C) = .051
(From Figure 701)

Our estimate for the Manning's n was .050, which is in-between the actual (V) and (C) values; therefore, no further iterations are necessary.

Step 2: (Check limiting velocity and Froude Number with the Manning's n value from the (V) curve).

Using a Manning's n of .043, the following information is calculated from the Manning's equation:

Normal depth = 1.41'
Velocity = 3.79 ft/sec (under 5 ft/sec OK)
Hydraulic Radius (R) = .722
Flow cross-sectional area (A) = 7.92 ft2
Top Width (T) = 11.26'
Hydraulic Depth (D) = A/T = .7033'
Calculate the Froude Number from the equation Fr = V/(G*D).5
V = average velocity (ft/sec)
G = acceleration of gravity = 32.2 ft/sec2
D = Hydraulic Depth = A/T

The Froude number is calculated to be .796, which is under the maximum of .8.

Step 3: Use the channel capacity design curve (C curve to determine how wide the drainage easement has to be).

Using the Manning's equation with a Manning's n of .051 from the previously calculated C curve, the following were calculated:

Depth = 1.50'
Depth with required freeboard = 2.5'
Required width of channel = 20'
Minimum easement width for maintenance = 25'
*(**Criteria**, Section 3.3.9)*
Minimum Grading Setback = 7'
*(Part II, Section 2 of the **Regulation**)*

The cross-section shown below would be acceptable:

Channel Cross Section Near Property Line

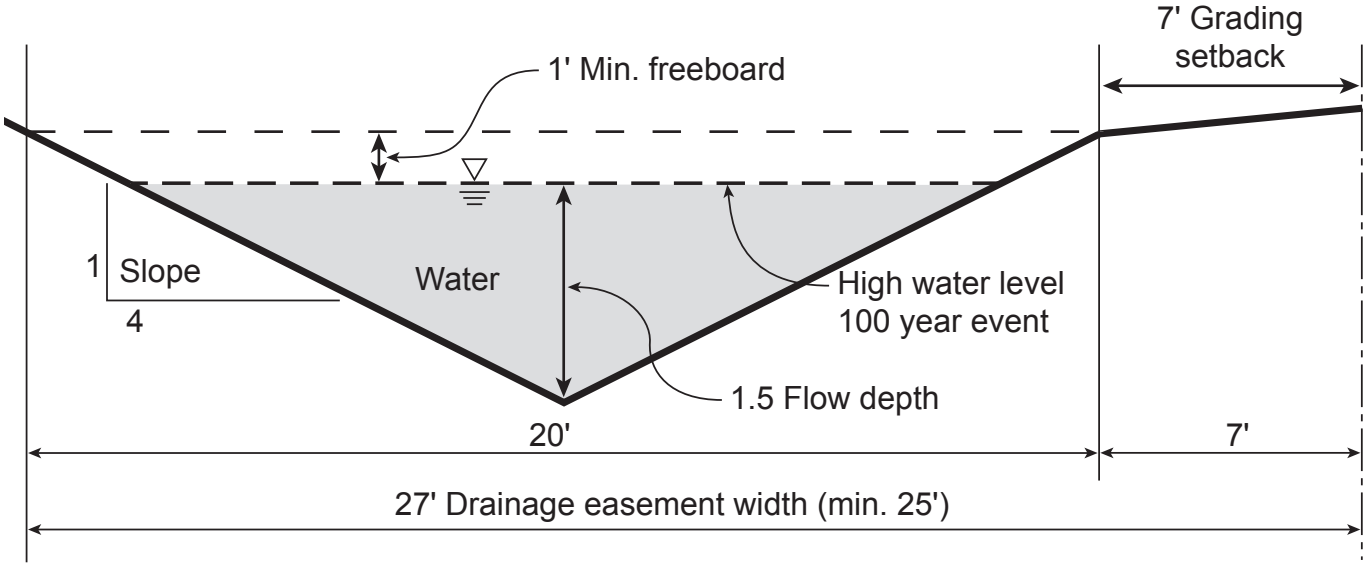

7.5.3 Concrete Lined Channels

The criteria for the design and construction of concrete lined channels is presented below:

1. Hydraulics

a. Freeboard

Adequate channel freeboard above the designed water surface will be provided and will not be less than that determined by the following:

$$HFB = 2.0 + 0.025\,V\,(d)^{1/3}$$

where

HFB = freeboard height (feet)

V = velocity (fps)

d = depth of flow (feet)

Freeboard will be in addition to superelevation, standing waves and/or other water surface disturbances. These special situations are to be addressed in a Design Report to be submitted with the construction drawings and specifications (Section 2.7).

Concrete side slopes will be extended to provide freeboard.

b. Superelevation

Superelevation of the water surface will be determined at all horizontal curves, and design of the channel section adjusted accordingly.

c. Velocities

Flow velocities will not exceed 18 fps during the 100-year flood.

2. Concrete Materials

A Design Report will be prepared as stated in Section 7.2.5. The minimum concrete material specifications are as follows:

a. Cement type: sulphate resistant.

b. All concrete will meet CDOT Class B specifications.

c. Maximum water-cement ratio: 0.50 (six gals. per sack).

d. Admixtures: All proposed admixtures will be discussed in the Design Report.

3. Concrete Lining Section

a. All concrete lining will have a sufficient thickness to withstand the structural and hydraulic loads.

b. The side slopes will be a maximum of 2 (vertical) to 1 (horizontal), or a structurally reinforced wall if steeper.

4. Concrete Joints

a. Expansion/contraction joints will be installed where new concrete lining is connected to a rigid structure or to existing concrete lining which is not continuously reinforced.

b. Longitudinal joints, where required, will be constructed on the sidewalls at least one foot vertically above channel invert.

c. All joints will be designed to prevent differential movement.

d. Construction joints are required for all cold joints and where the lining thickness changes.

5. Concrete Finish

The surface of the concrete lining will be provided with a wood float finish. Excessive working or wetting of the finish will be avoided.

6. Concrete Curing

All concrete will be cured by the application of a liquid membrane-forming curing compound (white pigmented) upon completion of the concrete finish.

7. Reinforcement steel (where used)

a. Steel reinforcement will be minimum grade-40 deformed bars. Wire mesh will not be used.

b. Ratio of longitudinal steel area to concrete cross sectional area will be greater than 0.005.

c. Ratio of transverse steel area to concrete cross sectional area will be greater than 0.0025.

d. Additional steel as needed if a retaining wall structure is used.

8. Earthwork

The following areas will be compacted to a least 95 percent of maximum density as determined by ASTM D-698 (Standard Effort):

a. The 12 inches of subgrade immediately beneath concrete lining (both channel bottom and side slopes).

b. Top 12 inches of maintenance road.

c. Top 12 inches of earth surface within 10 feet of concrete channel lip.

d. All fill material.

9. Bedding

Provide six inches of granular bedding equivalent in gradation to 3/4" concrete aggregate (*Standard Specifications for Road & Bridge Construction*, CDOT, Current printing, Section 703.02, No. 67) under channel bottom and side slopes.

10. Underdrain

Longitudinal underdrains will be provided on 10-foot centers and will daylight at the check drops. A check valve or flap gate will be provided at the outlet to prevent backflow into the drain. Weep holes will be provided in vertical wall sections of the channel.

11. Safety Requirements

a. A fence will be installed, as approved by Planning & Zoning, to prevent access wherever the 100-year channel flow depths exceed three feet.

7.5.4 Riprap Lined Channels

The criteria for the design and construction of riprap lined channels will be in accordance with the ***Manual***.

Riprap lined channels will be designed for a turbulence factor (Froude number) less than 0.8 for the 100-year flood peaks. The riprap will be designed and constructed in accordance with Section 12.2, "Conduit Outlet Structures" of these ***Criteria***. Freeboard requirements will be in accordance with the standards for grass lined channels defined in Section 7.4.2.3 of these ***Criteria***.

7.6 Street/Roadside Ditches

The criteria for the design of street/roadside ditches is similar to the criteria for grass lined channels with modifications for the special purpose of minor storm drainage. The criteria is as follows (refer to Figure 702):

1. Capacity

Street/Roadside ditches will have adequate capacity for the minor storm runoff peaks. Capacity will be as defined in Table 701. Where the storm runoff exceeds the capacity of the ditch, a storm sewer system will be required.

2. Flow Velocity

The maximum velocity for the major storm flood peak will not exceed 5 feet per second

3. Curvature

The minimum radius of curvature will be 25 feet.

4. Roughness Coefficient

Manning's "n" values presented in Figure 701 will be used in the capacity computation for street/roadside ditches.

5. Grass Lining

The grass lining will be in accordance with the ***Manual***. Alternative seed mixes may be required by Planning and Zoning as recommended by the JCD.

6. Cross Culvert Location

The surface drainage in a street/roadside ditch will not be carried in excess of 500 feet before being discharged into a natural drainageway. Grade changes of greater than 2% will require a cross culvert. The final location of culverts may be slightly altered by existing field conditions encountered during installation. Culverts will be installed at the slope of the natural terrain.

7. Major Drainage Capacity

The capacity of street/roadside ditches for major drainage flow is restricted by the maximum flow depth allowed at the street crown (Section 3.4.4). However, the flow spread should not extend outside the street ROW.

7.7 Channel Rundowns

A channel rundown is used to convey storm runoff from the bank of a channel to the invert of an open channel or drainageway. The purpose of the structure is to minimize channel bank erosion from concentrated overland flow. The design criteria for channel rundowns is as follows:

7.7.1 Cross-Sections

Typical cross-sections for channel rundowns are presented in Figure 704.

7.7.2 Design Flow

The channel rundown will be designed to carry a minimum of the minor storm runoff or 1 cfs, whichever is greater.

7.7.3 Flow Depth

The maximum depth at the design flow will be 12 inches. Due to the typical profile of a channel rundown beginning with a flat slope and then dropping steeply into the channel, the design depth of flow will be the computed critical depth for the design flow.

7.7.4 Outlet Configuration

The channel rundown outlet will enter the drainageway at the trickle channel flowline. Erosion protection of the opposite channel bank will be provided by a 24-inch layer of grouted Type-L riprap. The width of this riprap erosion protection will be at least three times the channel rundown width or pipe diameter. Riprap protection will extend up the opposite bank to the minor storm flow depth in the drainageway or 2 feet, whichever is greater.

Table 701

Street/Roadside Ditch Capacities

Ditch Slope	Ditch Type 1		Ditch Type 2		Ditch Type 3 *(Private Road Only)*	
	Capacity CFS	Velocity FPS	Capacity CFS	Velocity FPS	Capacity CFS	Velocity FPS
2%	26	4.2	36	4.16	1.9	0.95
2.50%	31	5	42	4.89	2.5	1.25
3.00%	32	5	40	5	3.2	1.6
3.50%	30	5	37	5	4	2
4.00%	28	5	33	5	4.8	2.4
5.00%	21	5	26	5	6	3.1
6.00%	17	5	22	5	8	4
7.00%	15	5	19	5	8	5
8.00%	13	5	16	5	7	5
10.00%	11	5	13	5	6	5
12.00%	9	5	11	5	5	5

Permitted on all mountain roads and local and collector streets
Only permitted on private and pubic roads in the mountains
Only permitted on private roads in the mountains
Only permitted on private roads where the natural terrain bears between south 60 east and south 45 west

Figure 701

Roughness Coefficients for Grassed Channels

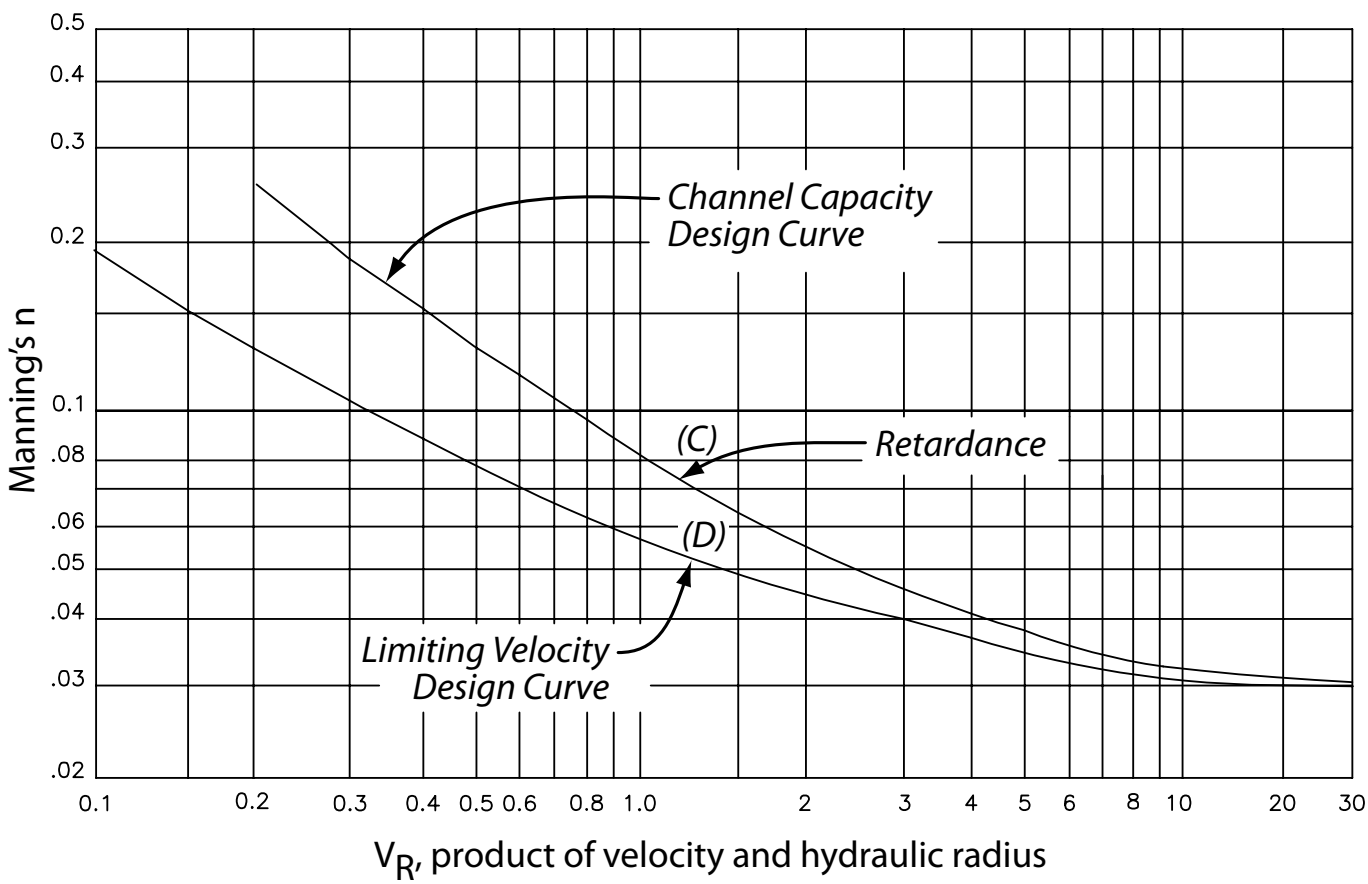

Reference: Handbook of Channel Design for Soil and Water Conservation, *U.S. Department of Agriculture, Soils Conservation Service, No. SCS-TP-61 March, 1947, Rev. June, 1954.*

Figure 702
Street / Roadside Ditch Sections

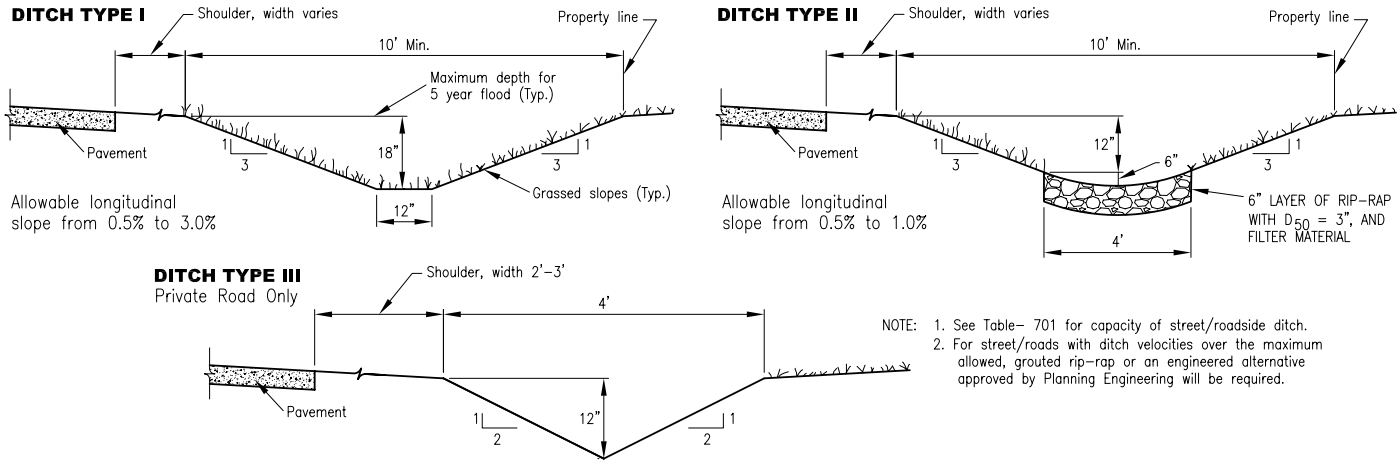

Figure 703
Trickle Channel Details

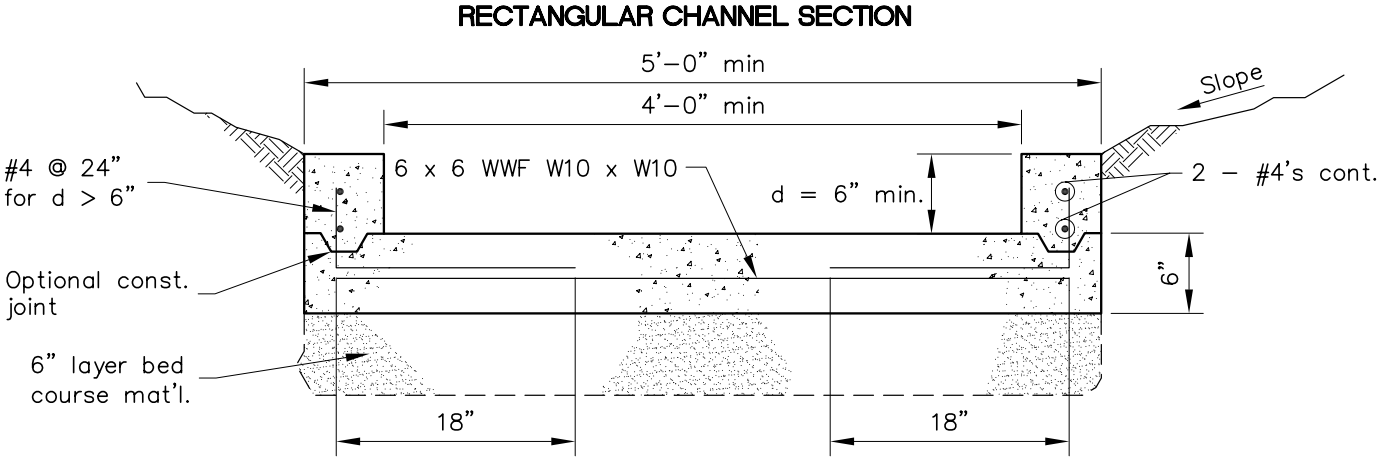

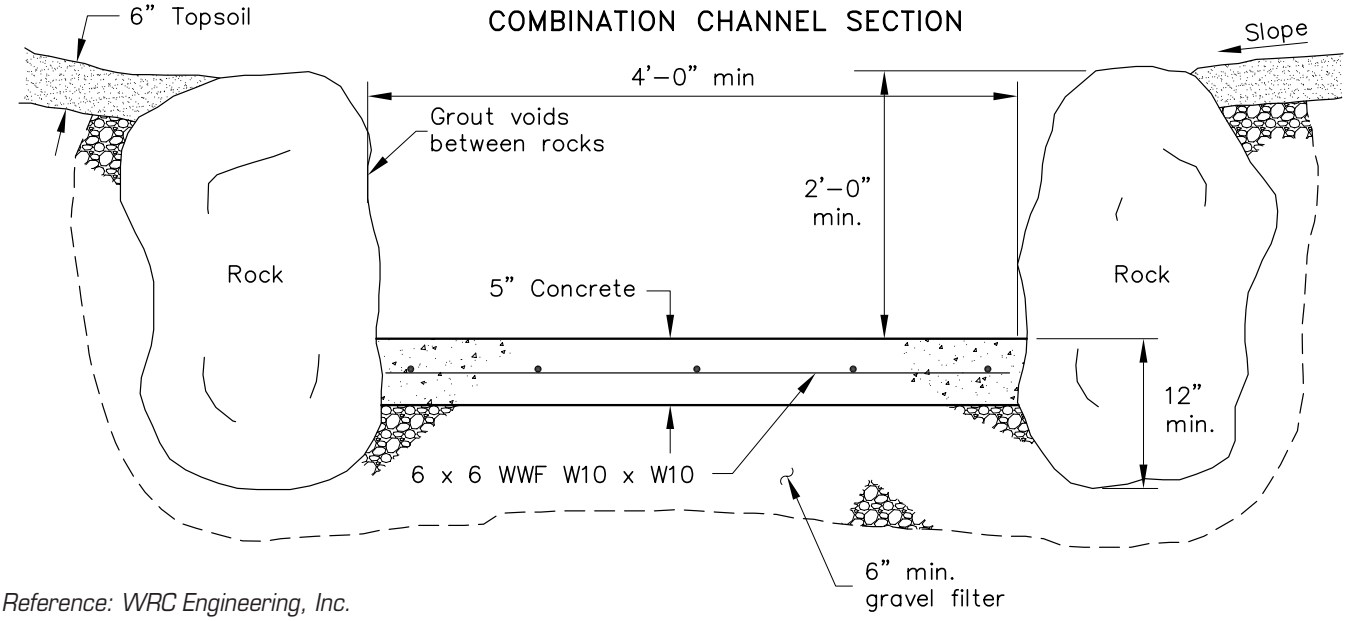

Reference: WRC Engineering, Inc.

Figure 704
Channel Rundown Details

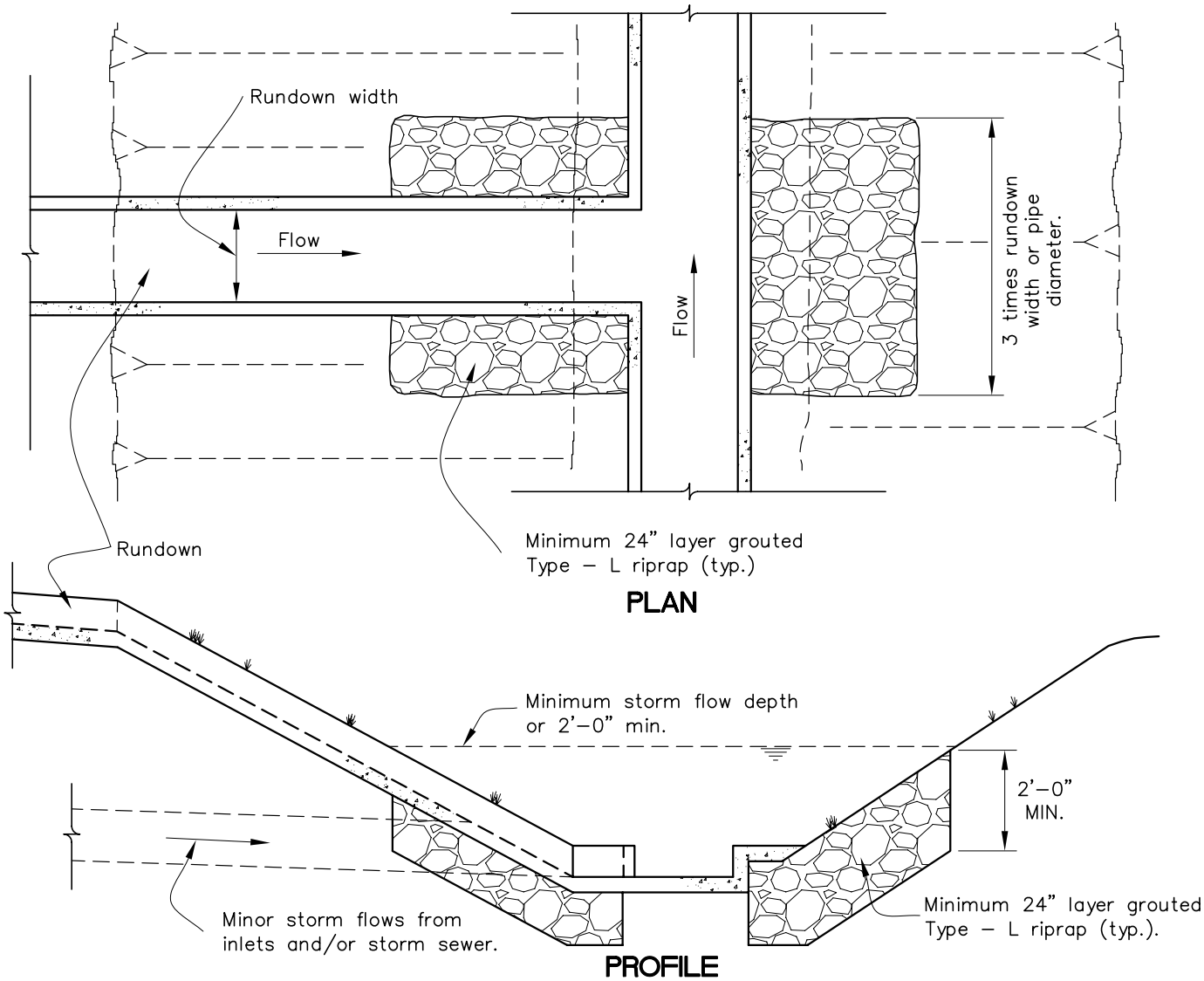

Chapter 8 - Storm Sewers

8.1 Introduction

Storm sewers are a part of the Minor Drainage System, and are required when the other parts of the minor system, primarily curb, gutter and street/roadside ditches no longer have capacity for additional runoff.

Except as modified herein, the design of storm sewers will be in accordance with the ***Manual*** Section on "Storm Sewers." The user is referred to the ***Manual*** and other references cited for additional discussion and basic design concepts.

Stormwater Quality Considerations: The use of grass swales to promote infiltration is highly encouraged; since replacing storm sewer with grass swales is not always reasonable, storm sewer is still an integral part in many drainage system designs.

Standard forms and spreadsheets are available in the ***Manual***. Additionally, the electronic version of the ***Manual*** provides design spreadsheets and software for use in designing storm sewer systems.

8.2 Construction Materials

RCP, in accordance with ASTM C76-03, C506-02 or C507-02, is the only material acceptable for use in storm sewer construction within County ROW. The minimum class of pipe will be Class II; however, the actual depth of cover, live load and field conditions may require structurally stronger pipe. CSP and HDPE pipe, in accordance with manufacturer's specifications, are only permitted in privately owned and maintained installations.

8.3 Hydraulic Design

Storm sewers will be designed to convey the minor storm flood peaks without surcharging the sewer. The design of the storm sewer must be checked to show that the hydraulic grade line is below the ground elevation during the major storm. To ensure that this objective is achieved the hydraulic and energy grade line calculated by accounting for pipe friction losses and pipe form losses. Total hydraulic losses will include friction, expansion, contraction, bend and junction losses. The methods for estimating these losses are presented in the following sections. The final energy grade line must be at or below the proposed ground surface if the major storm exceeds the allowable street capacity.

8.3.1 Pipe Friction Losses

The Manning's "n" values to be used in the calculation of storm sewer capacity and velocity are presented below:

Pipe Roughness Coefficients

Manning's n-value		
Sewer Type	Capacity Calculation	Velocity Calculation
RCP	0.015	0.011
CSP	0.026	0.021
HDPE	0.012	0.010

8.3.2 Pipe Form Losses

Generally, between the inlet and outlet structures of the storm sewer system, the flow encounters a variety of configurations in the flow passageway such as changes in pipe size, branches, bends, junctions, expansions and contractions. These shape variations impose losses in addition to those resulting from pipe friction. Form losses are the result of fully developed turbulence and can be expressed as follows:

$$HL = K \frac{V^2}{2g}$$

where

HL = head loss (feet)

K = loss coefficient

V = average flow velocity (feet per second)

g = gravitational acceleration (32.2 ft/sec2)

The following is a discussion of a few of the common types of form losses encountered in sewer system design.

1. Bend Losses

The head losses for bends, in excess of that caused by an equivalent length of straight pipe, may be expressed by the relation

$$HL = Kb \frac{V^2}{2g}$$

in which Kb is the bend coefficient. The bend coefficient has been found to be a function of, (a) the ratio of the radius of curvature of the bend to the width of the conduit, (b) deflection angle of the conduit, (c) geometry of the cross section of flow, and (d) the Reynolds number and relative roughness. A table showing the recommended bend loss coefficient is presented below.

Energy Loss Coefficients - Bends

Case I-Conduit on 90 degree curves	
θ	K_b
90	0.25
60	0.20
45	0.18
30	0.14

Note 1: Head loss applied at P.C. for length
Note 2: Applies only to pipe 48" or greater

$$K_b = 0.25 \left(\frac{\theta}{90}\right)^{0.5}$$

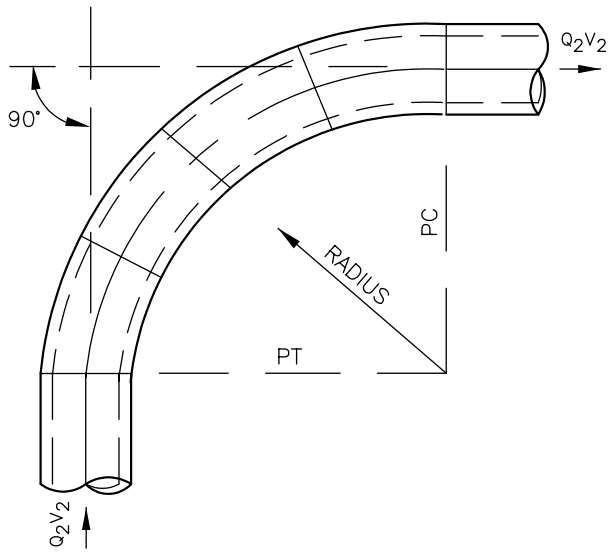

2. Junction and Manhole Losses

The loss coefficient Kb for bends at manholes is presented in Table 802. A junction occurs where one or more branch sewers enter a main sewer, usually at manholes. The hydraulic design of a junction is in effect the design of two or more transitions, one for each flow path. Allowances should be made for head loss due to the impact and junctions. The head loss for a straight through manhole or at an inlet entering the sewer is calculated from the following equation. The head loss at a junction can be calculated from:

$$HL = \frac{V2^2}{2g} - Kj \frac{V1^2}{2g}$$

where V2 is the outfall flow velocity and V1 is the inlet velocity. The loss coefficient, Kj, for various junctions is presented in Table 803.

8.3.3 Storm Sewer Outlets

When the storm sewer system discharges into the Major Drainageway System (usually an open channel), additional losses occur at the outlet in the form of expansion losses. For a headwall and no wingwalls, the loss coefficient Ke = 1.0 for a flared-end section the loss coefficient is approximately 0.5 or less.

8.3.4 Partially Full Pipe Flow

When a storm sewer is not flowing full, the sewer acts like an open channel, and the hydraulic properties can be calculated using open channel techniques (refer to Chapter 7). For convenience, charts for various pipe shapes have been developed for calculating the hydraulic properties (Figures 801, 802, 803). The data presented assumes that the friction coefficient, Manning's "n" value, does not vary throughout the depth.

8.4 Vertical Alignment

The sewer grade will be such that a minimum cover is maintained to withstand AASHTO HS-25 loading on the pipe. The minimum cover depends upon the pipe size, type and class and soil bedding condition, but will be not less than 1 foot at any point along the pipe.

The minimum clearance between storm sewer and water main, either above or below, will be 12 inches. Concrete encasement of the water line will be required for clearance of 12 inches or less.

The minimum clearance between storm sewer and sanitary sewer, either above or below, will also be 12 inches. In addition, when a sanitary sewer main lies above a storm sewer, or within 18 inches below, the sanitary sewer will have an impervious encasement or be constructed of structural sewer pipe for a minimum of 10 feet on each side of where the storm sewer crosses.

8.5 Horizontal Alignment

Storm sewer alignment may be curvilinear for pipe with diameters of 48 inches or greater but only when approved in writing by Planning & Zoning. The applicant must demonstrate the need for a curvilinear alignment. The limitations on the radius for pulled-joint pipe are dependent on the pipe length and diameter, and amount of opening permitted in the joint. The maximum allowable joint pull will be ¾ inches. The minimum parameters for radius type pipe are shown in Table 801. The radius requirements for pipe bends are dependent upon the manufacturer's specifications.

8.6 Pipe Size

The minimum allowable pipe size for storm sewers is dependent upon a practical diameter from the maintenance standpoint. The length of the sewer also affects the maintenance and, therefore, the minimum diameter. Table 801 presents the minimum pipe size for storm sewers.

8.7 Manholes

Manholes or maintenance access ports will be required whenever there is a change in size, direction, elevation, grade or where there is a junction of two or more sewers. A manhole may be required at the beginning and/or at the end of the curved section of storm sewer. The maximum spacing between manholes for various pipe sizes will be in accordance with Table 801. The required manhole size will be as follows:

Manhole Size

Sewer Diameter	Manhole Diameter
15" to 18"	4'
21" to 42"	5'
48" to 54"	6'
60" and larger	CDOT M-604-20, Page 2 of 3

Larger manhole diameters or a junction structure may be required when sewer alignments are not straight through or more than one sewer line goes through the manhole.

8.8 Checklist

To aid the designer and reviewer, the following checklist has been prepared:

1. Calculate energy grade line (EGL) and hydraulic grade line (HGL) for all sewers and show on the construction drawings or on a separate copy of the plans submitted with the construction drawings.
2. Account for all losses in the EGL calculation including outlet, form, bend, manhole and junction losses. Refer to Water Surface and Energy Grade Line Calculations for a Storm Sewer - Worksheet 801.
3. Provide adequate erosion protection at the outlet of all sewers into open channels.
4. Check for minimum pipe cover.
5. Check for adequate clearance with other utilities.

Table 801

Storm Sewer Alignment and Size Criteria

Minimum Pipe Diameter

Type	Minimum Pipe Diameter	Minimum Cross-sectional area
Main trunk	18 inch	1.77 sq. feet
Lateral from the inlet	15 inch	1.23 sq. feet

Note: Minimum size of the lateral will also be based upon a water surface inside the inlet at a minimum distance of 1 foot below the grate or throat.

Diameter of Pipe	Maximum Allowable Distance between Manholes and/or Cleanouts
15" to 36"	400 feet
42" and larger	500 feet

Minimum Radius for Radius Pipe

Diameter of Pipe	Minimum Radius of Curvature
48" to 54"	28.5 feet
57" to 72"	32.0 feet
78" to 108"	38.0 feet

Reference: Urban Storm Drainage Criteria Manual, *DRCOG, 1969*

Table 802

Energy Loss Coefficients - Bends at Manholes

Reference: Modern Sewer Design*, AISI, Washington D.C., 1980*

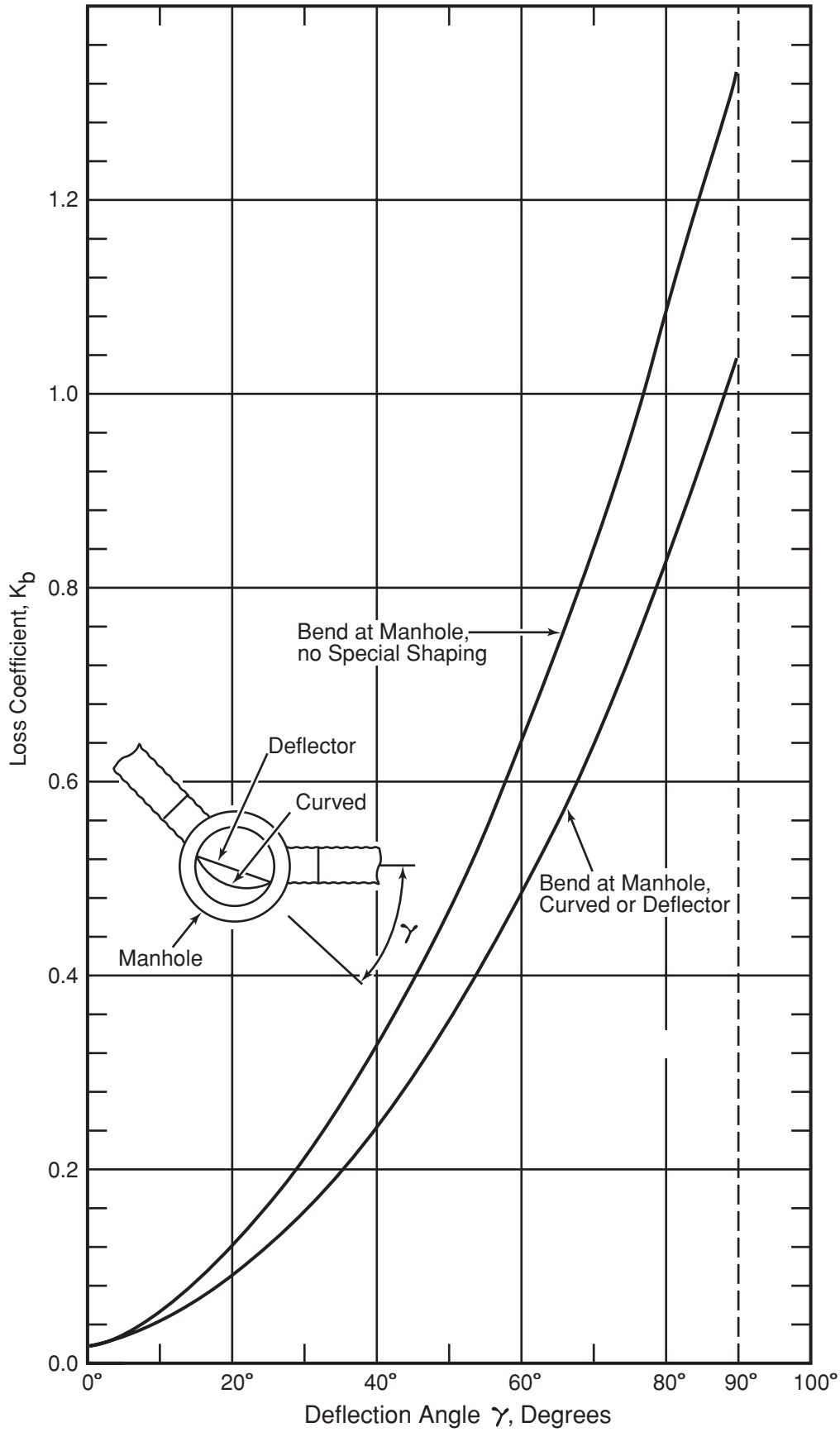

Note: Head loss applied at outlet of manhole.

Table 803

Manhole and Junction Losses

Reference: APWA Special Report No. 49, *1981*

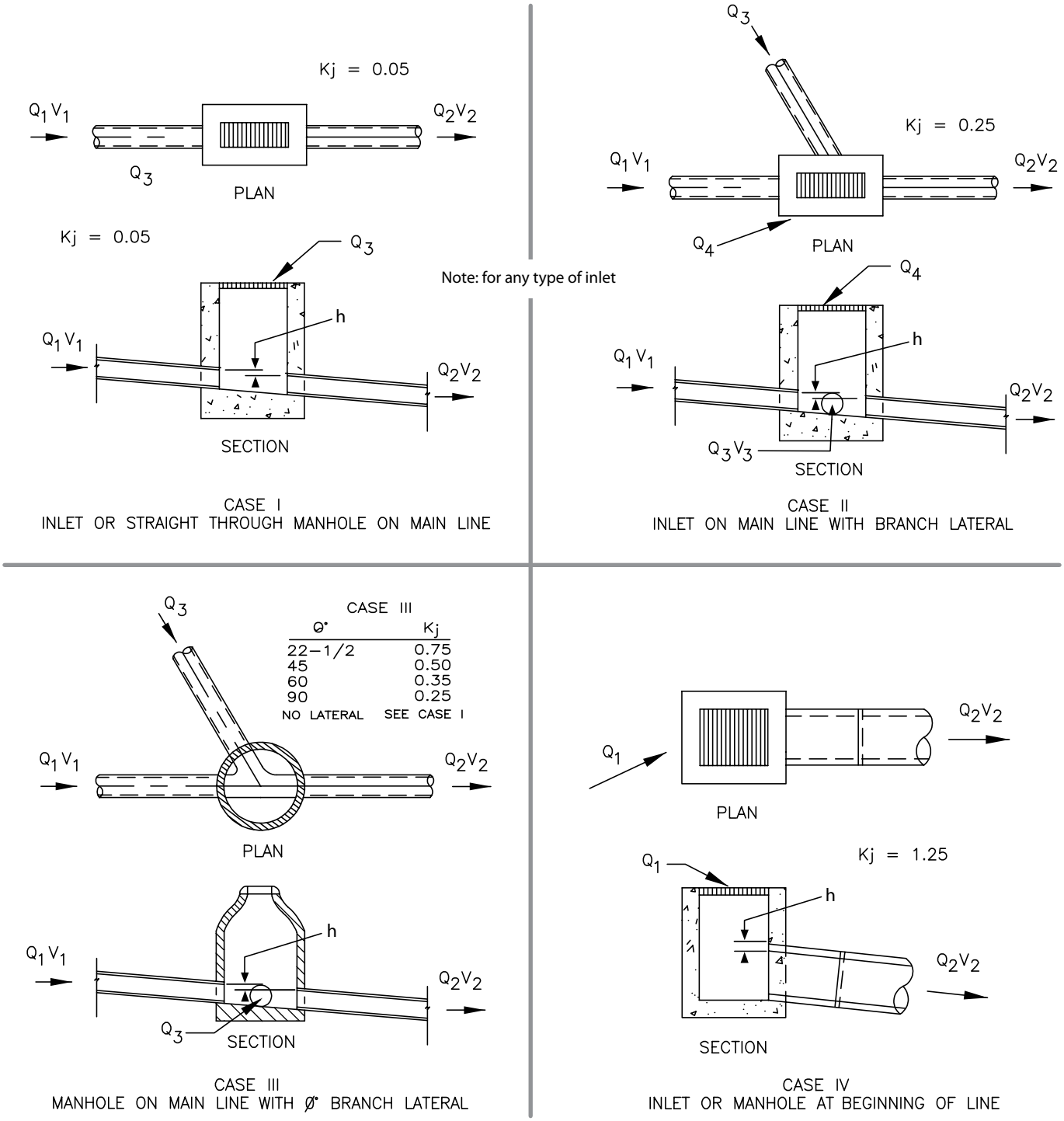

Figure - 801

Hydraulic Properties of Circular Pipe

Reference: Concrete Pipe Design Manual *ACPA, 1970*

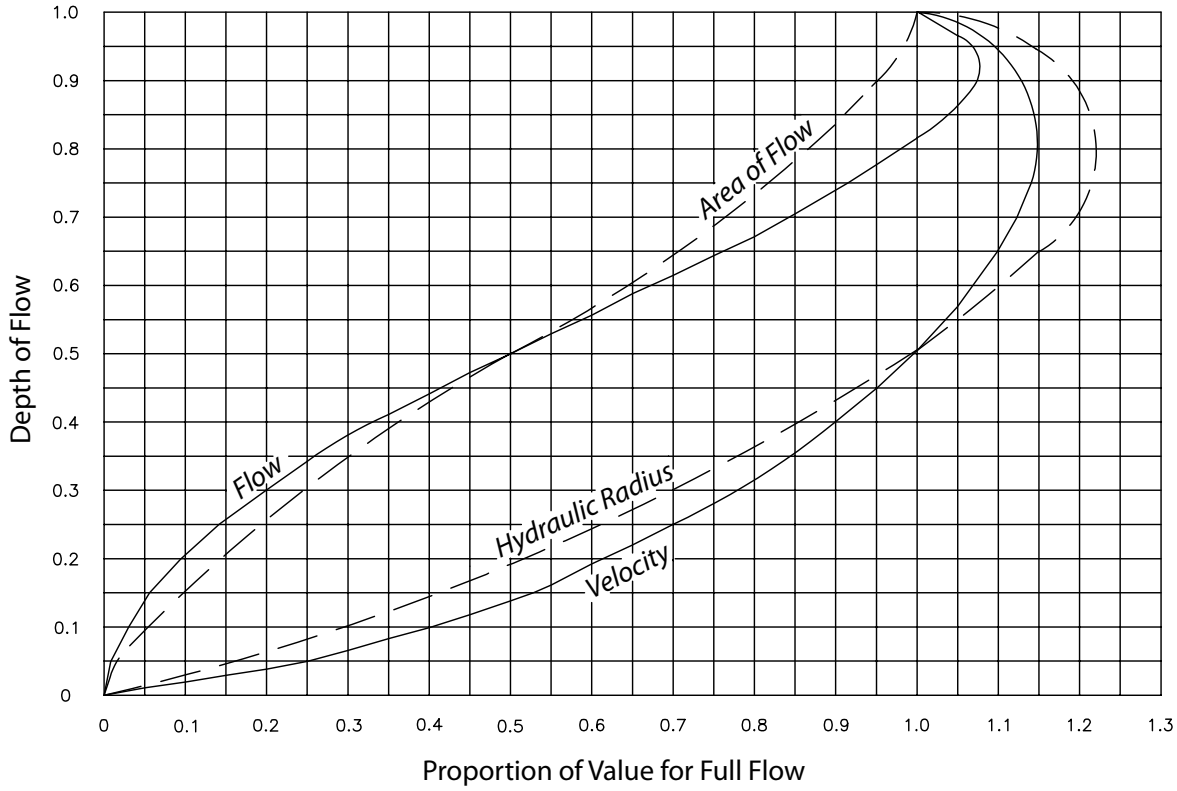

Figure 802

Hydraulic Properties Horizontal Elliptical Pipe

Reference: Concrete Pipe Design Manual *ACPA, 1970*

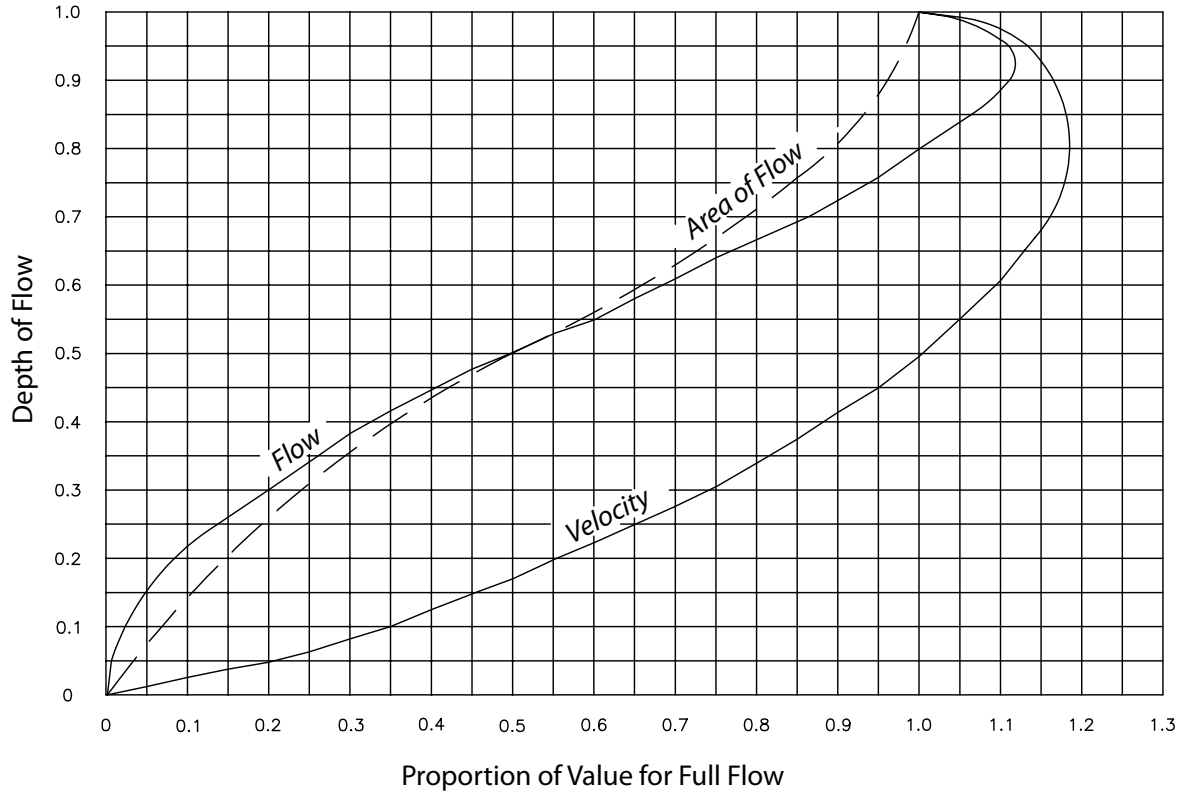

Figure 803

Hydraulic Properties of Arch Pipe

Reference: Concrete Pipe Design Manual *ACPA, 1970*

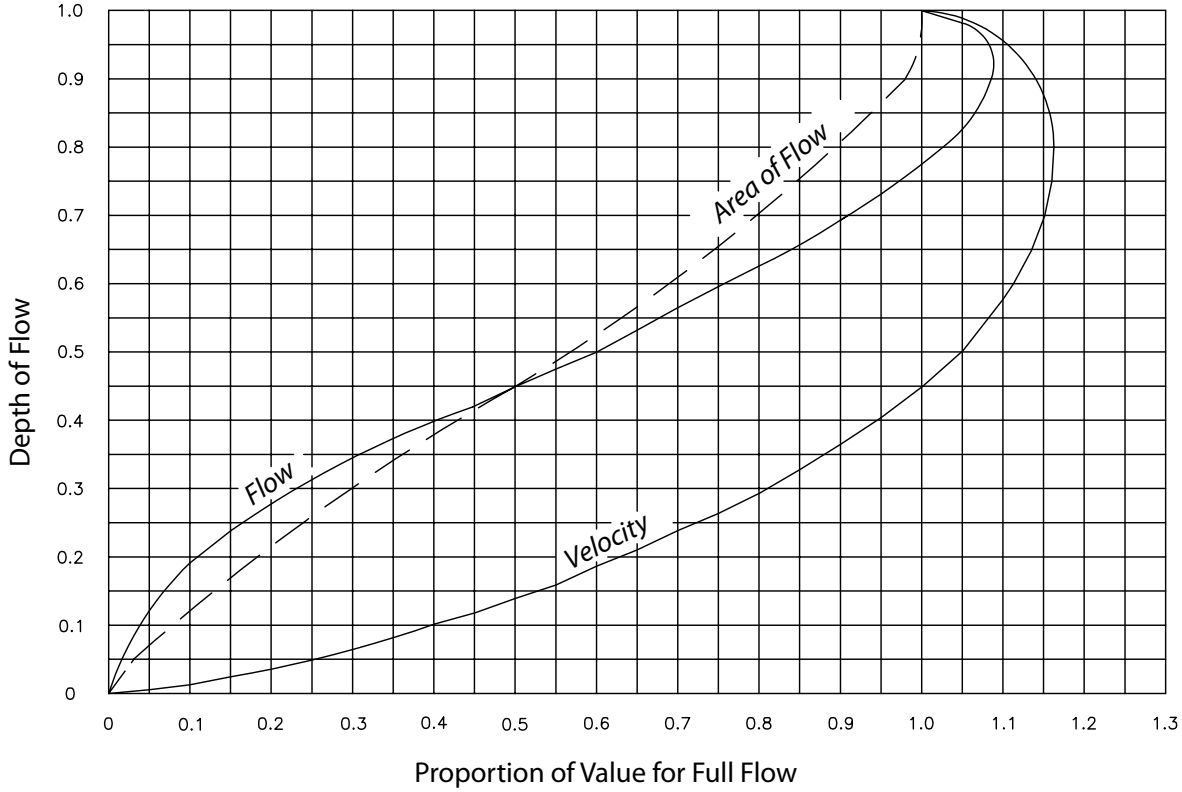

Worksheet 801

Water Surface and Energy Grade Line Calculations for a Storm Sewer

Pipe Material_____

Manning's n_____

Station	Invert	Pipe Dia.	W.S. Elev.	Pipe Shape	Area	¢	Velocity	Flow Rate	H_v	Energy Grade Line	S_f	Avg. S_f	Length	H_f	H_b	H_j	H_m	H_t	Total Loss
	(ft)	(in)	(ft)		(ft^2)		(fps)	(cfs)	(ft)	(ft)			(ft)	(ft)	(ft)	(ft)	(ft)	(ft)	(ft)

¢ = $(2g(n^2))$ / 2.21

$S_f = (¢H_v)$ / $R^{1.33}$

Chapter 9 - Storm Sewer Inlets

9.1 There are four types of inlets: curb opening, grated, combination and slotted inlets. Inlets are further classified as being on a continuous grade or in a sump. The term "continuous grade" refers to an inlet so located that the grade of the street has a continuous slope past the inlet and, therefore, ponding does not occur at the inlet. The sump condition exists whenever water is restricted or ponds because the inlet is located at a low point. A sump condition can occur at a change in grade of the street from positive to negative, or at an intersection due to the crown slope of a cross street.

Presented in this chapter are the criteria and methodology for design and evaluation of storm sewer inlets in the County. Except as modified herein, all storm sewer inlet criteria will be in accordance with the ***Manual***. Standard forms and spreadsheets are available in the ***Manual***. Additionally, a series of design spreadsheets and software is provided on the UD&FCD web site.

9.2 Standard Inlets

The standard inlets permitted for use in the County are:

Table 901

Standard Inlets

Inlet Type	Standard Detail	Permitted Use
Curb Opening Inlet Type R	Standard M-604-12 SD-1 (In ***Criteria***)	All street types
Grated Inlet Type C	CDOT M-604-10	All streets/roads with a roadside or median ditch
Grated Inlet Type 13	CDOT M-604-13	Private drives, alleys or parking areas
Combination Inlet Type 13	SD-2 (In ***Criteria***)	All street types
Slotted Inlet	Provide Manufacturer's Specifications	Private drives, alleys or parking areas
Median Inlet	SD-3 (In ***Criteria***)	In medians

9.3 Inlet Hydraulics

The procedures and basic data used to define the capacities of the standard inlets under various flow conditions were obtained from the ***Manual***, "Streets/Inlets/Storm Sewers". The procedure consists of defining the amount and depth of flow in the gutter, selecting the appropriate inlet type and determining the theoretical flow interception by the inlet. To account for effects which decrease the capacity of the various types of inlets, such as debris plugging, pavement overlaying and variations in design assumptions, the theoretical capacity calculated for the inlets is reduced to the allowed capacity by applying a clogging factor.

9.4 Inlet Spacing

The optimum spacing of storm inlets is dependent upon several factors including traffic requirements, contributing land use, street slope and distance to the nearest outfall system. The suggested sizing and spacing of the inlets is based upon the interception rate of 70% to 80%. This spacing has been found to be more efficient than a spacing using 100% interception rate. Using the suggested spacing only, the most downstream inlet in a development would be designed to intercept 100% of the flow. Also, considerable improvements in over-all inlet system efficiency can be achieved if the inlets are located in the sumps created by street intersections.

9.5 Inlet Capacity

The hydraulic capacity of an inlet is dependent on the type of inlet and the location (on a continuous grade or in a sump).

For the continuous grade condition, the capacity of the inlet is dependent upon many factors including gutter slope, depth of flow in the gutter, height and length of curb opening, street cross slope and the amount of depression at the inlet. In addition, all of the gutter flow will not be intercepted and some flow will continue past the inlet area (inlet carryover). The amount of carryover must be included in the drainage facility evaluation as well as in the design of the inlet (see Figure 901 for example).

The capacity of the inlet in a sump condition is dependent on the inlet geometry and the depth of ponding above the inlet.

1. Use the Urban Drainage UD-Inlet spreadsheet or the UD-Inlet software (most current versions) to calculate the selected inlet capacity.
2. Calculate design peak flow, including local peak flow and carryover flow, if applicable.
3. Determine street/gutter geometry:
(a) Allowable depth to gutter flowline, H
(b) Gutter width, W
(c) Gutter depression, a
(d) Street transverse slope, s_x
(e) Street longitudinal slope, s_o
(f) Manning's roughness, n (0.016)
(g) Maximum water spread, T
4. Determine inlet geometry:
(a) Inlet type
(b) Length of a single unit, L_O (5.00' for Type R, 3.27' for Type 13, 3.27' for combination)
(c) Width of a grate, W_O (n/a for Type R, 1.88' for Type 13,1.88' for combination)
(d) Height of curb opening, H (6" for Type R, n/a for Type 13, 6" for combination)
(e) Local depression, a_{local} (3" for Type R, 0" Type 13, 2" for combination)
(f) Angle of throat, theta (63.4^0 for Type R, n/a for Type 13, 90^0 for combination)
(g) Side width for depression pan, W_P (3.00' for Type R, n/a for Type 13, 2.00' for combination)
(h) Number of units, N_O
5. Determine inlet design coefficients, as applicable
(a) Clogging factor for a grate, C_0-G (0.5)
(b) Clogging factor for a curb opening, C_0-C (0.1)
(c) Clogging factor for a slotted inlet, C_0 (0.5)
(d) Area opening ratio for a grate, A (0.6)
(e) Grate orifice coefficient, C_d-G (0.67)
(f) Grate weir coefficient, C_w-G (3.00)
(g) Curb opening orifice coefficient, C_d-C (0.67)
(h) Curb opening weir coefficient, C_w-C (2.30)
(i) Slotted inlet orifice coefficient, C_d-S (0.80)
(j) Slotted inlet weir coefficient, C_w-S (2.48)

Figure 901
Inlet Design Example - Minor Storm

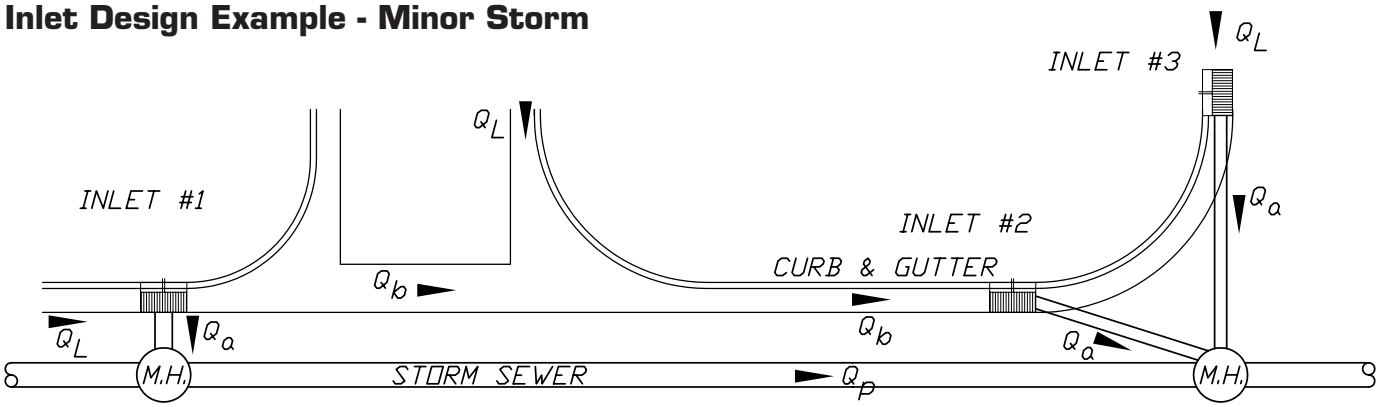

LEGEND Q_L = Local runoff for design storm tributary to designated inlet (cfs)
Q_a = Runoff intercepted by inlet (cfs)
Q_b = Carry over runoff past inlet (cfs)
Q_p = Runoff in pipe (cfs)

Chapter 10 – Streets/Roads

10.1 Introduction

The criteria presented in this chapter will be used in the evaluation of the allowable drainage encroachment within streets/roads. The review of all submittals will be based on the criteria herein and the ***Manual***, "Streets/Inlets/Storm Sewers". Standard forms and spreadsheets are available in the ***Manual***. Additionally, a series of design spreadsheets and software is provided on the UD&FCD web site.

10.2 Function of Streets/Roads in the Drainage System

Streets and roads, specifically the curb and gutter or the street/roadside ditches, are part of the Minor Drainage System. When the drainage in the street/road exceeds allowable limits, a storm sewer system (Chapter 9) or an open channel (Chapter 7) is required to convey the excess flows. The streets/roads are also part of the Major Drainage System when they carry floods in excess of the minor storm also subject to certain limitations. However, the primary function of streets/roads is for traffic movement and, therefore, the drainage function is subservient and must not interfere with the traffic function of the street/road.

Design criteria for the collection and moving of runoff water on streets/roads is based on a reasonable frequency and magnitude of traffic interference. That is, depending on the character of the street/road, certain traffic lanes can be fully inundated once during the minor design storm return period. However, during lesser intense storms, runoff will also inundate traffic lanes but to a lesser degree. The primary function of the streets/roads for the Minor Drainage System is therefore to convey the nuisance flows quickly and efficiently to the storm sewer or open channel drainage without interference with traffic movement. For the Major Drainage System, the function of the streets/roads is to provide an emergency passageway for the flood flows with minimal damage.

10.3 The Allowable Use of Streets/Roads as a Drainage System

The streets in the County are classified as arterial/parkway, collector and local, according to the average daily traffic (ADT) for which the street is designed. The larger the ADT, the more restrictive the allowable drainage encroachment into the driving lanes. The limits of storm runoff encroachment for each classification is shown in the following tables:

Table 1001

Allowable Use of Streets/Roads for Minor Storm Runoff

Street/Road Classification	Maximum Allowable Street/Road Encroachment
Major Collector/Arterial/Parkway	No curb overtopping. Flow spread must leave at least two 10-foot lanes free of water, 10 feet each side of the street/road crown/median.
Collector	No curb overtopping. Flow spread must leave at least one 10-foot lane free of water, 5 feet either side of the street/road crown.
Local	No curb overtopping for 6-inch vertical curb. Flow may spread to the back of sidewalk for a combination curb, gutter and sidewalk.

Table 1002

Allowable Use of Streets/Roads for Major Storm Runoff

Street/Road Classification	Maximum Allowable Street/Road Encroachment
Major Collector/Arterial/Parkway	Flow may spread to the back of sidewalk or to the top of curb if there is no sidewalk. To allow for emergency vehicles, the depth of water will not exceed 6 inches at the street crown or 12 inches at the gutter flowline whichever is more restrictive.
Local/Collector	Flow may spread to the back of sidewalk or to the top of curb if there is no sidewalk. The depth of water at the gutter flowline will not exceed maximum allowable depth or 12 inches.

Table 1003

Allowable Flow Depths for Standard Street Templates

The allowable flow depths presented in this table are based on the maximum allowable encroachment in Tables 1001 and 1002 and the standard templates. Allowable flow depths must be calculated for any modifications to the standard templates.

Street Classification	Allowable Minor Storm Flow Depth	Allowable Major Storm Flow Depth
Principal Arterial or Parkway (94' Flowline to Flowline with raised median)	6"	9.4"
Principal Arterial or Parkway (94' Flowline to Flowline without raised median)	6"	9.4"
Minor Arterial (70' Flowline to Flowline with raised median)	5.4"	9.4"
Minor Arterial (70' Flowline to Flowline without raised median)	6"	9.4"
Major Collector (49 feet flowline to flowline with raised median)	6"	9.4"
Major Collector (49' feet flowline to flowline without raised median)	6"	9.4"
Collector (with detached sidewalk)	4.7"	8.4"
Collector (with attached sidewalk)	4.7"	7.1"
Local (34' Flowline to Flowline, 6" vertical curb and detached sidewalk)	6"	8.4"
Local (34' Flowline to Flowline, combination curb, gutter, sidewalk)	5"	5"
Local (28' Flowline to Flowline, vertical curb and detached sidewalk)	6"	8.4"
Local (28' Flowline to Flowline, combination curb, gutter, sidewalk)	5"	5"

Table 1004

Allowable Cross Street Flow

Street/Road Classification	Minor Drainage System Maximum Depth	Major Drainage System Maximum Depth
Major Collector/Arterial/ Parkway	None	None
Collector	None	12" depth at gutter flowline or edge of pavement if no gutter
Local	6" depth in *cross pan or gutter flowline	12" depth at gutter flowline or edge of pavement if no gutter

**Cross-pans are prohibited on arterial streets/roads. Cross-pans are allowed on collector and local streets/roads only at locations where traffic stops are intended at intersections and no storm sewer is present.*

Table 1005

Allowable Culvert Overtopping

Street/Road Classification	Minor Drainage System Maximum Depth	Major Drainage System Maximum Depth*
Major Collector/Arterial/ Parkway	None	None. Minimum clearance between the low chord or culvert crown and the energy grade line is 6 inches for basins less than 2 square miles, 1 foot for basins up to 10 square miles and 2 feet for basins greater than 10 square miles.
Collector/Local	None	12" depth at gutter flowline or edge of pavement if no gutter. The maximum headwater depth is 1.5 times the culvert height. **

**The regulations set forth in the Zoning Resolution, also apply for culvert crossings that are within the Floodplain Overlay District.*
*** The allowable culvert overtopping equally applies to driveways.*

10.4 Hydraulic Evaluation

10.4.1. Allowable Gutter Capacity

The allowable gutter capacity is calculated using the modified Manning's formula. This equation is the basis of the UD-Inlet spreadsheet.

$Q = R(0.56)(Z/n)S^{1/2} d^{8/3})$

Where

Q = discharge in cfs
Z = $1/S_x$, where S_x is the street transverse slope(ft/ft)
d = depth of water at face of curb (feet)
S_o = street longitudinal slope(ft/ft)
n = Manning's roughness coefficient
R = reduction factor (***Manual***, Figure ST-2)

A Manning's n-value of 0.016 will be used for the calculations at all street slopes. The allowable gutter capacity is computed by multiplying the theoretical street capacity by the appropriate reduction factor. The purpose of the reduction factor is to account for various street conditions which decrease the street capacity. These conditions include street overlays, parked vehicles, debris and hail accumulation and deteriorated pavement. The reduction factor also is used to minimize damaging gutter flow velocities.

The allowable gutter capacity will need to be reduced for non-symmetrical street sections. Street capacity calculations will be submitted to the County at critical locations of the non-symmetrical streets.

10.4.2 Street/Road with Roadside Ditches

Some streets/roads are characterized by street/roadside ditches rather than curbs and gutters. The capacity is limited by the depth in the ditch and the maximum flow velocity. Refer to Section 7.6 for the design and capacity of street/roadside ditches.

Chapter 11 – Culverts

11.1 Introduction

A culvert is defined as a conduit for the passage of surface water under a, street/road, driveway, railroad, canal or other embankment (except detention outlets). Culvert design involves both hydraulic and structural design considerations. This chapter sets forth only the hydraulic aspects of culvert design.

Culverts may be constructed with many shapes and materials. The most commonly used shape is circular. Other shapes include elliptical, arch and box. The most common culvert materials are concrete and steel. The material selected for a culvert is dependent upon factors such as durability, strength, roughness, bedding, water-tightness and abrasion and corrosion resistance.

11.2 Culvert Hydraulics

The procedures and basic data to be used for the hydraulic evaluation of culverts in the County will be in accordance with the ***Manual***, "Culverts," except as modified herein. The reader is also referred to the many texts covering the subject for additional information.

11.3 Culvert Design Standards

11.3.1 Construction Material and Pipe Size

Within the County ROW, culverts will be constructed from corrugated steel or concrete. Other materials for construction outside of County ROW will be subject to approval by Planning and Zoning.

The minimum pipe size for culverts within a public ROW will be 18 inches diameter round culvert, or will have a minimum cross sectional area of 1.6 ft2 for arch shapes. Driveway culverts will be sized to pass the minor storm ditch flow capacity without overtopping the driveway. The minimum size culvert will be an 18" x 11" CSPA (15" equivalent round pipe) with flared end sections. Larger sizes may be required by Planning and Zoning as determined by the required culvert capacity calculations. Culverts crossing a drainageway will be sized to pass a 10 year storm without street overtopping. Using future developed conditions for the 100-year runoff, the allowable street overtopping will be determined from overflow rating curves developed from the street profile crossing the waterway.

11.3.2 Inlet and Outlet Configuration

Within the County, all culverts for drainageways are to be designed with headwalls or with flared-end sections at the inlet. Flared-end sections are only allowed on corrugated steel pipes with diameters of 42-inches (or equivalent) or less. No multiple barrel installations will be allowed unless warranted by special conditions as approved by Planning and Zoning.

Headwalls, wingwalls and flared-end sections should be designed and constructed to use the existing landforms of the site and blend with the natural landscape.

Additional protection in the form of riprap will also be required at the outlet due to the potential scouring velocities. Refer to Section 12.2.

11.3.3 Hydraulic Data

When evaluating the capacity of a culvert, the following data will be used:

a. Roughness Coefficient - Table 1101.
b. Entrance Loss Coefficients - Table 1101.

c. Capacity Curves - There are many charts, tables and curves in the literature for the computation of culvert hydraulic capacity. To assist in the review of the culvert design computations and to obtain uniformity of analysis, one of the following design aids will be used:

Urban Storm Drainage Criteria Manual, Denver, Colorado, latest revision

HY8 Culvert Analysis Version 6.1, U.S. Federal Highway Administration, Washington, D.C.

d. Design Forms - Standard Form SF-3 is to be used for determining culvert capacities. A sample computation is discussed in Section 11.4 and shown on Table 1102.

11.3.4 Velocity Considerations

In design of culverts, both the minimum and maximum velocities must be considered. A minimum velocity of flow is required to assure a self-cleansing condition of the culvert. A minimum velocity in the culvert of 3-fps at the outlet is recommended.

The maximum velocity is dictated by the channel conditions at the outlet. If the outlet velocities are less than 7-fps for grassed channels, then the minimum amount of protection is required due to the eddy currents generated by the flow transition. Higher outlet velocities will require substantially more protection. A maximum outlet velocity of 12-fps is recommended with erosion protection. If the culvert outlet velocity is greater than 12-fps, an energy dissipator will be required. Refer to Sections-12.2 for protection requirements at culvert outlet.

11.3.5 Headwater Considerations

The maximum allowed headwater for the 100-year design flows will be 1.5 times the culvert diameter, or 1.5 times the culvert rise dimension for shapes other than round. Also, the headwater depth may be limited by the street overtopping criteria in Section 10.3.

11.3.6 Cross Culvert Location

The surface drainage in a street/roadside ditch will not be carried in excess of 500 feet before being discharged into a natural drainageway. Grade changes of greater than 2% will require a cross culvert. The final location of culverts will be determined by existing field conditions encountered during installation. Culverts will be installed at the slope of the natural terrain.

11.3.7 Structural Design

As a minimum, all culverts will be designed to withstand an HS-25 loading (unless otherwise approved by Planning & Zoning) in accordance with the design procedures of AASHTO, "Standard Specifications for Highway Bridges," and with the pipe manufacturer's recommendation.

11.3.8 Trashracks

Trashracks may be required at the entrance of culverts for some installations as loading (unless otherwise approved by Planning & Zoning), such as areas with potential for significant debris, or in areas where public access is likely. Installation of trashracks prevents debris from entering culverts.

The following criteria will be used for design of trashracks for storm drainage applications:

1. Materials

All trashracks will be constructed with smooth steel pipe with a minimum 1.25 inches outside diameter. The trashrack ends and bracing should be constructed with steel angle sections. All trashrack components will have a corrosion protective finish.

2. Trashrack Design

The trashracks will be constructed without cross-braces (if possible) in order to minimize debris clogging. The trashrack will be designed to withstand the full hydraulic load of a completely plugged trashrack based on the highest anticipated depth of ponding at the trashrack. The trashrack will also be hinged and removable for maintenance purposes. The clear opening at the bottom should be 9 to 12 inches to permit debris at low flow to go through.

3. Bar Spacing

The steel pipe bars will be spaced with a clear opening of 4 ½ to 5 inches. In addition, the entire rack will have a minimum clear opening area (normal to the rack) at the design flow depth of four times the culvert opening area.

4. Trashrack Slope

The trashrack will have a longitudinal slope of no steeper than 3 horizontal to 1 vertical for maintenance purposes.

5. Hydraulics

Hydraulic losses through trashracks will be computed using the following equation:

$H_T = 0.11\ (TV/D)2(\text{Sin } A)$

where:

H_T = Head Loss through Trashrack (feet)
T = Thickness of Trashrack Bar (inches)
V = Velocity Normal to Trashrack (fps)
D = Center-to-Center Spacing of Bars (inches)
A = Angle of Inclination of Rack with Horizontal

This equation will apply to all racks constructed normal to the approach flow direction. The velocity normal to the trashrack will be computed considering the rack to be 50 percent plugged.

This equation is a modification of the equation presented in *Design Standards No. 3 - Canals and Related Structures*, U.S. Department of the Interior, Bureau of Reclamation, Denver, Colorado. The modification consists of changing the computed head loss from inches to feet and eliminating the factor which accounts for approach flow directions other than normal to the trashrack.

11.4 Design Example

The procedure recommended to evaluate existing and proposed culverts is based on the procedures presented in HEC-5, *Hydraulic Charts for the Selection of Highway Culverts* HEC No. 5, USDOT, FHWA. The methodology consists of evaluating the culvert headwater requirements, assuming both inlet control and outlet control. The rating which results in the larger headwater requirements is the governing flow condition.

A sample calculation for rating an existing culvert is presented in Table 1102. The required data are as follows:

Culvert size, length and type (48" CMP, L = 150', n = .024).
Inlet, outlet elevation and slope (5540.0, 5535.5, so = 0.030).
Inlet treatment (flared end-section).
Low point elevation of embankment (EL = 5551.9).
Tailwater rating curve (see Table 1102, Column 5).

From the above data, the entrance loss coefficient, K2, and the n-value are determined. The full flow Q and the velocity are calculated for comparison. The rating then proceeds in the following sequence:

Step 1: Headwater values are selected and entered in column 3. The headwater to pipe diameter ratio (Hw/D) is calculated and entered in column 2. If the culvert is other than circular, the height of the culvert is used.

Step 2: For the Hw/D ratios, the culvert capacity is read from the rating curves (Section-11.3.3) and entered into column 1. This completes the inlet condition rating.

Step 3: For outlet condition, the Q values in column 1 are used to determine the head values (H) in column 4 from the appropriate outlet rating curves (Section-11.3.3).

Step 4: The tailwater depths (Tw) are entered into column 5 for the corresponding Q values in column 1 according to the tailwater rating curve (i.e., downstream channel rating computations). If the tailwater depth (Tw) is less than the diameter of the culvert (D), column 6 and 7 are to be calculated (go to Step 5). If Tw is more than D, the tailwater values in column 5 are entered into column 8 for the h_o values, and proceed to Step 6.

Step 5: The critical depth (dc) for the corresponding Q values in column 1 are entered into column 6. The average of the critical depth and the culvert diameter is calculated and entered into column 7 as the $_{ho}$ values.

Step 6: The headwater values (H_w) are calculated according to the equation:

$$H_w = H + {}_{ho} - LS_o$$

where H is from column 4, and $_{ho}$ is from column 8 (for Tw>D) or the larger value between column 5 and column 7 (for Tw<D). The values are entered into column 9.

Step 7: The final step is to compare the headwater requirements (columns 9 and 3) and to record the higher of the two values in column 10. The type of control is recorded in column 11, depending upon which case gives the higher headwater requirements. The headwater elevation is calculated by adding the controlling Hw (column 10) to the upstream invert elevation. A culvert rating curve can then be plotted from the values in columns 12 and 1.

To size a culvert crossing, the same form can be used with some variations in the basic procedures. First, a design capacity is selected and the maximum allowable headwater is determined. An inlet type (i.e., headwall) is selected, and the invert elevations and culvert slope are estimated based upon site constraints. A culvert type is then selected and first rated for inlet control and then for outlet control. If the controlling headwater exceeds the maximum allowable headwater, a different culvert configuration is selected and the procedure repeated until the desired results are achieved.

11.5 Culvert Sizing Criteria

11..5.1 Culverts within Drainageways

The sizing of a culvert is dependent upon two factors, the street classification and the allowable street overtopping. The allowable street overtopping for the various street classifications is set forth in Section 10.3. In addition to this policy, a criteria requiring that no street overtopping occur for a 10-year frequency storm has been established. Therefore, as a minimum design standard for street crossings, the following procedure will be used:

1. Using the future developed conditions 100-year runoff, the allowable street overtopping will be determined from overflow rating curves developed from the street profile crossing the waterway.

2. The culvert is then sized for the difference between the 100-year runoff and the allowable overtopping.

3. If the resulting culvert is smaller than that required to pass the 10-year flood peak without overtopping, the culvert will be increased in size to pass the 10-year flow.

The criteria is considered a minimum design standard and must be modified where other factors are considered more important. For instance, if the procedure still results in certain structures remaining in the 100-year floodplain, the design frequency may be increased to lower the floodplain elevation. Also, if only a small increase in culvert size is required to prevent overtopping, then the larger culvert is recommended.

11..5.2. Cross Culverts and Driveway Culverts within Street/Roadside Ditches

Minimum sizing of culverts is delineated in Section 11.6 of these Criteria. As a minimum, cross culverts and driveway culverts shall be designed to accommodate the ditch capacity.

11.6 Checklist

To aid the designer and reviewer, the following checklist has been prepared:

1. Minimum culvert size within the public ROW, such as cross tubes, is 18-inch diameter round or equivalent for other shapes.

2. Minimum culvert size for street/roadside ditches at driveways is 15-inch diameter round or equivalent for other shapes.
3. Headwalls, wingwalls or flared end sections required for all culverts in accordance with these Criteria.
4. Check outlet velocity and provide adequate protection.
5. Check maximum headwater for design condition.
6. Check structural requirements.

Table 1101

Hydraulic Data For Culverts

Pipe Roughness Coefficients

Manning's n-value	
Sewer Type	**Capacity Calculation**
RCP	0.015
CSP	0.026
HDPE	0.012

(D) Culvert Entrance Losses

	Type of Entrance	Entrance Coefficient, Ke
Pipe		
	Headwall	
	Grooved edge	0.20
	Rounded Edge (0.15D radius)	0.15
	Rounded edge (0.25D radius)	0.10
	Square edge (cut concrete and CMP)	0.40
	Headwall & 45° Wingwall	
	Grooved edge	0.20
	Square edge	0.35
	Headwall with Parallel Wingwalls Spaced 1.25D apart	
	Grooved edge	0.30
	Square edge	0.40
	Projecting entrance	
	Grooved edge RCP	0.25
	Square edge RCP	0.50
	Sharp edge, thin wall CMP	0.90
	Flared-end Section	0.50
Box, Reinforced Concrete		
	Headwall Parallel to Embankment (no wingwalls)	
	Square edge of 3 edges	0.50
	Rounded on 3 edges to radius of 1/12 barrel dimension	0.20
	Wingwalls at 30° to 75° to barrel	
	Square edged at crown	0.40
	Crown edge rounded to radius of 1/12 barrel dimension	0.20
	Wingwalls at 10° to 30° to barrel	
	Square edged at crown	0.50
	Wingwalls parallel (extension of sides)	
	Square edged at crown	0.70

Note: The entrance loss coefficients are used to evaluate the culvert or sewer capacity operating under outlet control.
Reference: Handbook of Steel Drainage and Highway Construction Products, *AISI 1991*

Table 1102

Standard Form SF-3 Culvert Rating

Project: *Design Example* **Location:** *Jefferson County* **Station:** *2+00*

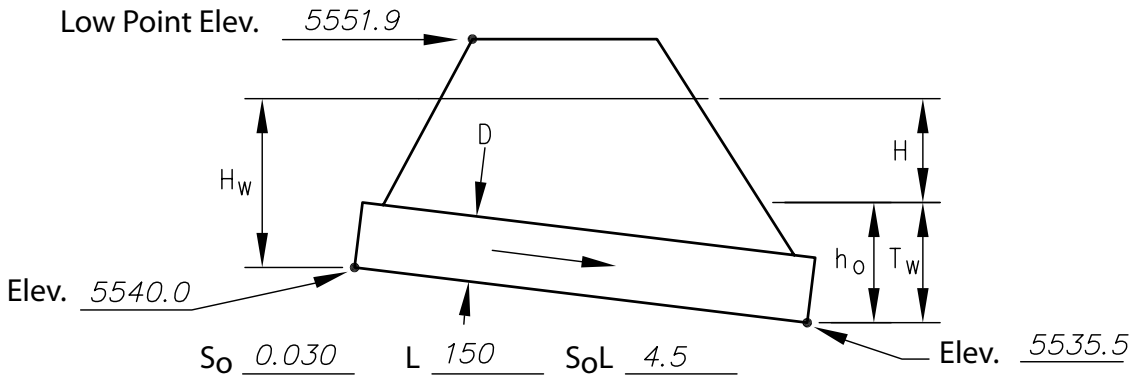

Culvert Data

Type: 48" CMP n: 0.024

Inlet Flared End Section Q_{Full}: 13.5

K_e 0.5 K_{Full}: 10.7

Outlet Control Equations

1. $H_w = H + h_o - LS_o$
2. For $T_w < D_i$ $h_o = \frac{d_c + D}{2}$ or T_w (whichever is greater)
3. For box culvert: $d = 0.315(Q/B)^{2/3} \leq D$
   (for any other shapes see HEC-5)

Q	Inlet Control		Outlet Control						Cont.	Control	Elev.
					$T_o < D$		$T_o > D$				
	H_c D	H_w	H	T_w	D_c	$\frac{D_c + D}{2} = h_o$	H_o	H_w	H_w		
1	2	3	4	5	6	7	8	9	10	11	12
70	1.0	4	1.9	1.5	2.5	3.3		0.7	4	Inlet	5544.0
115	1.5	6	5.5	2.0	3.0	3.5		4.5	6	Inlet	5546.0
145	2.0(3)	8	8.9	2.5	3.4	3.7		8.1	8.1	Outlet	5548.8
170(1)	2.5(3)	10	12.5	3.0	3.7	3.9		11.9	11.9	Outlet	5551.9
195(2)	3.0(3)	12	16.0	3.5	4.0	4.0		15.5	15.5	Outlet	5555.5

Outlet Velocity, V = Q/A = 170 cfs/12.8 ft.^{2} = 13.5 fps

Notes:

(1) Culvert capacity
(2) Road overtopping
(3) Example only

Chapter 12 - Hydraulic Structures

12.1 Introduction

Hydraulic structures are used in storm drainage work to control the flow of the runoff. The energy associated with flowing water has the potential to create damage to the drainage works, especially in the form of erosion. Hydraulic structures, which include Conduit Outlet Structures, energy dissipators, check structures, bridges and irrigation ditch crossings, all control the energy and minimize the damage potential of storm runoff.

The criteria to be used in the design of hydraulic structures will be in accordance with the ***Manual***. The specific criteria to be used with the modifications for the County are presented herein.

12.2 Conduit Outlet Structures

Outlet protection is required for all storm-sewer and culvert locations. The design of Conduit Outlet Structures will be in accordance with the ***Manual***.

12.3 Channel Grade Control Structures (Check and Drop Structures)

As discussed in chapter, "Open Channels," there is a maximum permissible velocity for major design storm run-off in grass lined channels. One of the more common methods of controlling the flow velocity is to reduce the channel invert slope, which requires a check drop to make up for the elevation difference occurring when the channel slope is reduced.

The design criteria for the check drops will be in accordance with the ***Manual***.

12.4 Bridges

The design of bridges within the County will be in accordance with the ***Manual***. The design capacity of the bridge will be determined by the method presented in Section 11.5 of these ***Criteria***.

12.5 Irrigation Ditch Crossings

Any proposed development in the vicinity of the ditches or canals that crosses or utilizes the canal for surface drainage or proposes to make any modifications to the existing topography which alters and/or affects water quality and drainage patterns to the ditch will have the plans approved by the ditch company prior to approval by the County.

Chapter 13 - Stormwater Quality Management

13.1 Introduction

The intent of this Chapter is to present minimum criteria for the implementation and use of BMPs in order to achieve the goal of mitigated stormwater quality during construction and after construction. Compliance with these ***Criteria*** does not require water quality monitoring by the individual developer, or quantitative descriptions of pollutant load removal. Instead, a performance-based approach is required for erosion, sediment and pollutant transport control. Individual methods must be selected and implemented to best fit the conditions and requirements of each site.

The quality of stormwater runoff from developed lands and urbanized areas can be impacted by some or all of the sources and pollutants shown in Table 1301. Stormwater quality control methods and techniques have been developed for two distinct phases of urbanization: the initial construction period of land disturbing activities and the ongoing response of the urban system to rainfall and runoff events. Site planning and engineering for developing lands must provide controls for both phases of urbanization. The general objectives for each of these two phases of urbanization are discussed in this chapter.

Table 1301
Possible Sources of Pollutants in Stormwater

Source	Contaminant
Vehicles, Machinery and Industrial Activities	Metals, Lubricants, Solvents, Paints
Lawn Care, Gardening	Pesticides, Herbicides, Fertilizers, Sediments
Household Chemicals	Paints, Solvents, Detergents, Disinfectants, Cleaners, Chlorine
General Population	Litter, Trash, Debris
Pets and Animals	Fecal Matter, Organic Wastes
Parking Lots	Oil, Grease, Automotive Fluids, Sediments
Construction	Soil and Sediment Particles

13.2 Temporary Erosion Control for Construction Activities

Construction activities that disturb the natural soil and vegetation have the potential to increase soil erosion and sediment movement. The disturbed, loose soil is easily eroded by the forces of rainfall, concentrated runoff and wind.

Erosion and sediment control practices are required, to the maximum extent practicable, on all developing sites. These practices are required to prevent disturbed soils from leaving the site and to maintain stormwater quality at a level comparable to the historic runoff conditions that existed prior to the construction activities.

Site planning and design must meet all of the objectives for stormwater quality control. Design and performance information for a variety of erosion and sediment control measures that are currently in practice or recommended for use in the region is presented in detail in the ***Manual***.

The Land Disturbance Section of the Jefferson County Zoning Resolution describes the submittal requirements and specifications for grading and erosion control plans and the minimum performance standards for site grading and erosion and sediment control.

13.3 Permanent Controls for Stormwater Quality Management

13.3.1 Objectives for Permanent Stormwater Quality Control

Jefferson County requires that land undergoing development activities incorporate BMPs to achieve the objectives of permanent stormwater quality control. The following principles and objectives of stormwater quality BMPs will be used by the County to determine if adequate controls have been proposed during the site design and development process:

Minimize, to the maximum extent practicable, impacts of stormwater on receiving waters. An effective level of urban pollutant removal should be accomplished by the selected BMPs.

The site's physical constraints need to be considered. Select and design BMPs to work within the conditions on the site.

Economic impacts of the selected BMPs must be considered. Controls must be evaluated for installation (construction) costs and for future operation and/or maintenance costs.

Multi-use benefits should be incorporated within stormwater quality features whenever possible. Land intensive BMPs, such as detention/retention ponds and vegetative strips should be designed to incorporate recreational and aesthetic features such as open space and landscape values whenever possible.

Opportunities for participation in master-planned regional facilities have been considered. The County will be contacted to determine if regional facilities for stormwater quality control may be available to the planned site.

13.3.2 BMPs for Permanent Control

The Four-Step Process described in the ***Manual***, is required for selecting structural BMPs in developing areas. Selection of a BMP must include consideration of long-term function and maintenance design expectations, an estimate of annual maintenance costs and maintenance schedule, the source of funding and anticipated life of the structural BMP.

Step 1. Employ Runoff Reduction Practices

To reduce runoff peaks and volumes from urbanizing areas, employ a practice generally termed "minimizing directly connected impervious areas" (MDCIA). The principal behind MDCIA is twofold – to reduce impervious

areas and to route runoff from impervious surfaces over grassy areas to slow down runoff and promote infiltration. The benefits are less runoff, less stormwater pollution and less cost for drainage infrastructure.

a. Reduce "Actual" Impervious Area

- Replace regular pavement with modular block porous pavement or stabilized grass porous pavement
- Replace storm sewer or hard surface swales with grass swales

b. Reduce "Effective" Impervious Area

- Direct runoff from impervious surfaces to grass buffers or grass swales
- Replace curb and gutter with grass swales
- Direct stormwater from parking lot(s) into an infiltration and/or water quality BMP prior to conveyance to the stormwater detention and water quality pond

Step 2. Provide Water Quality Capture Volume (WQCV)

A fundamental requirement for any site addressing stormwater quality is to provide WQCV. One or more of six types of water quality basins, each draining slowly to provide for long-term settling of sediment particles, may be selected (***Manual***, ND-9 "Decision Tree for WQCV BMP Selection").

- Porous Pavement Detention
- Porous Landscape Detention
- Extended Detention Basin
- Sand Filter Extended Detention Basin
- Constructed Wetland Basin
- Retention Pond

Step 3. Stabilize Drainageways

Drainageway erosion, natural and manmade, can be a major source of sediment and associated constituents, such as phosphorus. Natural drainageways are often subject to bed and bank erosion when urbanizing areas increase the frequency, rate and volume of runoff. It is important that drainageways adjacent to or traversing development sites be stabilized. One of three basic methods of stabilization may be selected.

- Constructed Grass, Riprap or Concrete-Lined Channel
- Stabilized Natural Channel
- Constructed Wetland Channel

Step 4. Implement Industrial and Commercial BMPs

If the development includes industrial or commercial uses, the need for specialized BMPs must be considered.

- Covering Storage and Handling Areas
- Spill Containment and Control

Other BMPs

Manufactured devices such as water quality vaults and inlets, infiltration trenches and oil/grease separators, may be considered when a stormwater quality variance is granted in accordance with Section 3.3.7 and site constraints do not allow for full implementation of Step 1 and Step 2 BMPs.

13.3.3 Minimum Design Criteria

It is expected that the BMPs designed for each site will vary depending on land use, extent of development, redevelopment constraints and the physical characteristics of the site (soils, slope and runoff).

The County will evaluate the adequacy and appropriateness of the proposed BMPs based on their fulfillment of the previously stated objectives, as well as the satisfaction of the following minimum design criteria:

1. A site specific Stormwater Quality Control Plan and associated hydraulic calculations will be incorporated in the Phase III Drainage Report and plan describing: the type of BMPs selected and associated hydraulic calculations, a construction and implementation schedule and a description of long term maintenance requirements and responsibilities.

2. The design of sites will incorporate one or more BMPs from Step 1 and Step 2 designed to capture and treat the calculated EURV as defined in the ***Manual***.

When incorporating Urban Excess Runoff Volume into a stormwater quantity detention basin, the capacity will be based on the following:

Onstream WQCV and EURV facilities are not recommended unless they are designed as regional facilities. If a non-regional WQCV and EURV facility is placed onstream, it must be designed to serve the upstream watershed based on current development conditions. Credit will be given for WQCV and EURV facilities that have already been constructed in the upstream watershed.

3. The design of sites will incorporate one or more BMPs from Steps 3 and 4 depending on the planned use of the site and the proximity to drainageways.

4. Design criteria for manufactured devices are dependent on the specific device. The appropriateness of a device will be considered on a case-by-case basis.

5. Non-residential projects which include more than the required number of parking spaces will be required to employ one or more Step 1 BMPs to limit the effective impervious area which would result from the minimum required number of parking spaces as determined by the Jefferson County Zoning Resolution.

6. Permanent erosion protection and stabilization measures will be provided for all disturbed areas.

Chapter 14 – Detention

14.1 Introduction

The criteria presented in this chapter will be used in the design and evaluation of all facilities. The review of all planning submittals (refer to Chapter 2) will be based on the criteria presented in this section.

The main purpose of a detention facility is to store the excess storm runoff associated with an increased basin imperviousness and discharge this excess at a rate similar to the rate experienced from the basin without development. Any special design condition which cannot be defined by these ***Criteria*** will be reviewed by Planning and Zoning before proceeding with design.

Dams and water diversion/detention areas should be designed and constructed to appear as natural features, creating site amenities. Techniques to achieve this include creation of topographic changes that mimic natural conditions (including a variety of slope changes), using natural materials such as stone, blending with the textures and patterns of the surrounding landscape and using materials that match the local environment. When possible, preserve existing drainage patterns.

14.2 Detention Methods

The various detention methods are defined on the basis of where the facility is constructed, such as open space detention, parking lot or underground. Full spectrum detention is required for all new storm drainage facilities. Full spectrum detention is required for all modified facilities if additional pond volume is necessary due to an increase in the proposed development area and/or increased designed impervious area. Full Spectrum Detention will be designed as outlined in Chapter 13 and the ***Manual***.

14.3 Design Criteria

14.3.1 Volume and Release Rates

Method	Site Conditions
Empirical Equations for Sizing of On-Site Detention Storage Volumes in the Storage Chapter of the ***Manual***	Basins under 10 acres. Do not use with significant offsite flows or if release rates must be reduced below the allowable release rates, due to limited outfall capabilities.
Rational Formula-Based Modified FAA Procedure in the Storage Chapter of the ***Manual***	Allowable for any pond with a tributary area under 160 acres. The Hydrogragh Routing Procedure is more accurate for basins over 90 acres
Hydrograph Routing Procedures using Colorado Urban Hydrogragh Procedure (CUHP) or other Urban Drainage recognized procedure	Allowable for any pond with a upstream tributary area of over 90 acres

The maximum release rates at the ponding depths corresponding to the 100-year volumes are as follows.

Allowable Release Rates for Detention Ponds - cfs/acre

	Soil Group		
Control Frequency	A	B	C & D
100-year	0.50	0.85	1.00

The predominate soil group for the total basin area tributary to the detention pond will be used for determining the allowable release rate. Information on the soils in the County can be found in, *Soil Survey of Golden Area, Colorado*, USDA, SCS, 1983. Developments that are required to use CUHP to determine flow rates must use the historic CUHP run as the allowable release rate if the historic CUHP flows are under the flows calculated from the table above.

Planning and Zoning may require a lower release rate than allowable if the pond is discharging into a historic drainageway that does not have adequate capacity. It is the responsibility of the design engineer to determine if the historic drainageway has adequate capacity.

Use the table below to determine the minimum combined volume for the facility.

Combining the EURV and the 100-year Detention Volume Within the Same Detention Facility

Required total combined volume	Design Situation
100% of the EURV + the 100year detention volume	New pond with no MDCIA as outlined in the ***Manual***
50% of the EURV + the 100 year detention volume	New ponds where the site meets the criteria of MDCIA Level 1
EURV may be incorporated within the detention volume	Site meets the criteria of MDCIA Level 2. and/or retrofitting an existing detention facility without water quality or an EURV in the detention facility

Development applications that do not increase the impervious percentage and/or total impervious area from the originally designed and approved detention pond are permitted to:

- use the original design equations to determine if the pond has adequate volume
- combine the EURV volume within the detention volume

14.3.2 Design Frequency

All detention facilities are to be designed for the 100-year recurrence interval flood.

14.3.3 Hydraulic Design

Hydraulic design data for sizing of detention facilities outlet works is as follows:

1. Weir flow

The general form of the equation for horizontal crested weirs is:

$Q = CLH^{3/2}$

Where Q = discharge (cfs)

C = weir coefficient
(*Table 1401*)

L = horizontal length (feet)

H = total energy head (feet)

Another common weir is the v-notch; the equation is as follows:

$Q = 2.5 \tan (\theta/2) H^{5/2}$

Where θ = angle of the notch at the apex (degrees)

When designing or evaluating weir flow, the effects of submergence must be considered. A single check on submergence can be made by comparing the tailwater to the headwater depth. The example calculation for a weir design on Figure 1403 illustrates the submergence check.

2. Orifice Flow

The equation governing the orifice opening and plate is the orifice flow equation:

$Q = CdA\ (2gh)^{1/2}$

Where Q = Flow (cfs)

C_d = Orifice coefficient

A = Area (ft^2)

g = Gravitational constant = 32.2 ft/sec^2

h = Head on orifice measured from centerline of orifice (ft)

An orifice coefficient (C_d) value of 0.65 will be used for sizing of square edged orifice openings and plates.

14.4 Design Standards for Open Space Detention

14.4.1 State Engineer's Office

Any dam constructed for the purpose of storing water, with a surface area, volume or dam height as specified in CRS 37-87-105 as amended, will require the approval of the plans by the State Engineer's Office. All detention storage areas will be designed and constructed in accordance with these ***Criteria***. Those facilities subject to the state statutes will be designed and constructed in accordance with the criteria of the state.

14.4.2 Grading Requirements

Slopes on riprapped earthen embankments will not be steeper than 3 (horizontal) to 1 (vertical). For grassed detention facilities, the minimum bottom slope will be 2.0 percent measured perpendicular to the trickle channel. Slopes for detention ponds that are eligible for Urban Drainage maintenance assistance will not be steeper than 4 (horizontal) to 1 (vertical).

14.4.3 Retaining Walls

Retaining walls are permitted in detention ponds below the 100-year water surface elevation as long as all of the following requirements are met.

- The retaining wall must be made of large blocks (one-ton weight per block or heavier) or monolithic pour concrete.
- The retaining wall must not exceed 50% of the detention pond perimeter for residential or institutional use.
- Safety improvements are provided as required by Planning and Zoning. Examples include but are not limited to fencing and guardrails.

14.4.4 Freeboard Requirements

The minimum required freeboard for open space detention facilities is 1.0 foot above the computed 100-year water surface elevation.

14.4.5 Trickle Flow Control

All grassed bottom detention ponds, except porous landscape detention, will include a concrete lined trickle channel or equivalent performing materials and design. Trickle flow criteria is presented in Section 7.4.2.6(a).

14.4.6 Outlet Configuration

See the ***Manual*** storage chapter and Figures 1401 and 1402 for outlet configuration details. Minimum pipe outlet size is 15 inches. Trash racks are required for all water quality and EURV openings and will be designed in accordance with the ***Manual***.

The outlet will be designed to minimize unauthorized modifications, which affect proper function. A sign with a minimum area of 0.75 square feet will be attached to the outlet or posted nearby with the following message:

WARNING

Unauthorized modification of this outlet is a knowing violation of Section 309 of the Clean Water Act.
Punishment: Fine and/or Imprisonment: 3-6 years

The 100-year discharge must pass over the weir and therefore the weir must be of adequate length. The effective weir length (L) occurs for three sides of the box. To ensure the 100-year control occurs at the throat of the outlet pipe, a 50 percent increase in the required weir length is required. In addition, the outlet pipe must have an adequate slope to ensure throat control in the pipe.

14.4.7 Embankment Protection

Whenever a detention pond uses an embankment to contain water, the embankment will be protected from catastrophic failure due to overtopping. Overtopping can occur when the pond outlets become obstructed or when a larger than 100-year storm occurs. Failure protection for the embankment will be provided by a separate emergency spillway having a minimum capacity of twice the maximum release rate for the 100-year storm, or in the form of a buried heavy riprap layer on the entire downstream face of the embankment. Emergency spillways will be directed toward an open channel, natural drainageway, street/roadside ditch or a street (see Figure 1407). Structures will not be permitted in the path of the emergency spillway or overflow. The invert of the emergency spillway should be set equal to or above the 100-year water surface elevation.

14.4.8 Vegetation Requirements

All open space detention ponds under 7000 feet in elevation will be revegetated by either irrigated sod or natural dry-land grasses in accordance with the ***Manual***. Detention ponds above 7000 feet in elevation will be revegetated according to the recommendations of the JCD and/or the *Jefferson County Small Site Erosion Control manual*.

14.5 Design Standards for MPLD

MPLD may be used only for single family residential developments within the mountains. See Figure 1408 for the design requirements for MPLD.

All non-lot specific designs of MPLD is required at the time of development process. Lot specific design of the MPLD may be delayed until the time of building permit at the discretion of the Planning and Zoning subject to the following requirements.

- The Phase III Drainage Report includes the MPLD volume calculations and soil type/classification and percolation test if in soil type C
- The Phase III Drainage Report discusses the general location of the MPLD's and the proposed septic system, if any
- The Phase III Drainage Report includes a typical design of an MPLD
- Drainage easements and performance guarantees for MPLD's are provided

14.6 Design Standards for Parking Lot Detention

The requirements for parking lot detention is as follows:

14.6.1 Depth Limitation

The maximum allowable design depth of the ponding for the 100-year flood is 12 inches.

14.6.2 Freeboard Requirements

The minimum required freeboard for parking lot detention facilities is .25 feet above the computed 100-year water surface elevation. There may need to be more than .25 feet of freeboard depending on overflow weir capacity calculations.

14.6.3 Overflow Requirements

All parking lot detention ponds will have a safe overflow that at a minimum has capacity for the 100-year allowable release rate.

14.6.4 Outlet Configuration

The minimum pipe size for the outlet is 15" diameter where a drop inlet is used to discharge to a storm sewer or drainageway. Where a weir and a small diameter outlet through a curb are used, the size and shape are dependent on the discharge/storage requirements. A minimum pipe size of 3" diameter is recommended.

14.6.5 Performance

To assure that the detention facility performs as designed, maintenance access will be provided in accordance with Section 3.3.9. The outlet will be designed to minimize unauthorized modifications which affect function. Any repaving of the parking lot will be evaluated for impact on volume and release rates and is subject to approval by Planning and Zoning

14.6.6 Flood Hazard Warning

All parking lot detention areas will have a minimum of two signs posted identifying the detention pond area. The signs will have a minimum area of 1.5 square feet and contain the following message:

WARNING

This area is a detention basin and is subject to periodic flooding to a depth of (provide design depth).

Any suitable materials and geometry of the sign are permissible, subject to approval by Planning and Zoning.

14.6.7 EURV

EURV in a parking lot must meet the standards for Porous Pavement Detention outlined in the ***Manual***.

14.7 Design Standards for Underground Detention

The requirements for underground detention are as follows:

14.7.1 Materials

Underground detention will be constructed using ASP, HDPE or RCP. The pipe thickness cover, bedding and backfill will be designed to withstand HS-20 loading or as required by Planning and Zoning.

14.7.2 Configuration

Pipe segments will be sufficient in number, diameter and length to provide the required minimum storage volume for the 100-year design. As an option, the design can be stored in the pipe segments and the difference for the 100-year stored above the pipe in an open space detention (Section 14.4) or in a parking lot detention (Section 14.5). The minimum diameter of the pipe segments will be 36 inches.

The pipe segments will be placed side by side and connected at both ends by elbow tee fittings and across the fitting at the outlet (see Figure 1405). The pipe segments will be continuously sloped at a minimum of 0.25% to the outlet. Manholes for maintenance access (see Section 14.6.5) will be placed in the tee fittings and in the straight segments of the pipe, when required.

Permanent buildings or structures will not be placed directly above the underground detention.

14.7.3 Overflow Requirements

All underground detention will have a safe overflow that at a minimum has capacity for the 100-year allowable release rate.

14.7.4 Inlet and Outlet Design

The outlet from the detention will consist of a short (maximum 25 ft.) length(s) of CSP or RCP with a 15" minimum diameter. A two-pipe outlet may be required to control both design frequencies. The invert of the lowest outlet pipe will be set at the lowest point in the detention pipes. The outlet pipe(s) will discharge into a standard manhole (see CDOT M-604-20) or into a drainageway with erosion protection provided per Sections 11.3.2, 12.2 and 12.3. If an orifice plate is required to control the release rates, the plate(s) will be hinged to open into the detention pipes to facilitate back flushing of the outlet pipe(s).

Inlet to the detention pipes can be by way of surface inlets and/or by a local private storm sewer system.

14.7.5 EURV

EURV facilities must be designed in accordance with the ***Manual*** design criteria, unless it is demonstrated that the proposed method is as effective as the ***Manual*** design criteria.

14.7.6 Maintenance Access

Access easements to the detention site will be provided in accordance with Section 3.3.10. To facilitate cleaning of the pipe segments, 3-foot diameter maintenance access ports will be placed according to the following schedule:

Maintenance Access Requirements

Detention Pipe Size	Maximum Spacing	Minimum Frequency
36" to 54"	150'	Every pipe segment
60" to 66"	200'	Every other pipe segment
>66"	200'	One at each end of the battery of pipes

The manholes will be constructed in accordance with the detail on Figure 1405.

14.8 Design Standards for Combined Detention Ponds

Combined detention ponds, such as open space/parking lot detention, must meet the relevant set of design standards for design of each portion of the detention pond.

14.9 Design Examples

Detention Design for Open Space Detention Pond:

Given: A basin that has the following characteristics:

Basin Area (A) = 23 acres
Basin Imperviousness (I) = 55%
Predominate Soil Group = D (*Soil Survey of Golden Area*, Colorado, USDA, SCS, 1983)
Time of Concentration T(c) = 15 minutes
Rainfall Zone 1
MDCIA credit level 1 given for providing a grass-lined swale and porous concrete parking area.

Required: 100-year release rates and design volume for EURV and 100-year detention volume.

Solution:

Step 1: Use the UD&FCD spreadsheet for the modified FAA method to calculate the required volume for the 100-year detention volume located at the UD&FCD web-site. The required 100-year detention volume is 64,548 cubic feet.

Step 2: Calculate the required EURV volume:

This project is fulfilling the design criteria for the MDCIA Level 1. According to table ND-8 in the ***Manual***, the effective impervious percentage for the EURV is reduced from 55% to 50.6%. Using the full spectrum detention spreadsheet from the UD&FCD web-site, the required EURV is calculated to be 49,658 cubic feet.

Step 3: A way to reduce the total volume is to design a project using the MDCIA design criteria. Section 14.3.2 allows additional reductions in total volume if the MDCIA design criteria is used. For a project designed in accordance with MDCIA Level 1, the required total volume is calculated as follows: 100-year detention volume + 50% EURV = 89,377 cubic feet.

If minimizing directly connected impervious area (MDCIA) is not used on the site, assuming the basin imperviousness does not change (in some cases the basin imperviousness will increase), the required total volume increases to 118,998 cubic feet - an increase of over 33%.

Step 4: Determine maximum allowed 100-year release rate:

Q100 = 1.00 A
= 1.00 x 23
= 23.0 cfs

Detention Outlet Structure Design:

Given: Detention pond with the following characteristics (see previous example)

Maximum 100-yr release rate = 23.0 cfs
Type 2 outlet (refer to Figure 1401)

Required: 100-year outlet sizing

Solution: (see Figure 1404)

Step 1: Compute Stage Storage Graph:

Use the formula Volume 1/3(A1+A2+(A1+A2)1/2)D

Stage Storage Graph

D = Depth (Feet)	A=Area (Ft2)	Volume	Total Volume
0	0	0	0
1	10,000	3,330	3,330
2	18,000	13,800	17,130
3	28,000	22,814	39,944
4	40,000	33,820	73,764
5	54,000	46,820	120,584
6	65,000	59,510	180,094

Volume (EURV) = 49,658 ft^3
Volume (100 Year + 50% EURV) = 89,377 ft^3
EURV water surface elevation = 3.4 ft
100-year Water Surface Elevation = 4.6 ft
100-year Orifice Elevation = 0.5 ft
Freeboard elevation = 5.6 ft

Step 2: Size orifice area for 100-year outlet (24" RCP, h = 4.1 feet)

$A = Q/C_d(2gh)^{1/2})$
$= 23.0/(0.65)(2.(32.2)(4.1))^{1/2})$
$A = 2.18\ ft^2$

Step 3: Determine 100-year orifice diameter

Diameter $= (4A/\pi)^{1/2}$
$= ((4)(2.18)/\pi)^{1/2}$
$= 1.67$ feet = 20 inches

Use 24" outlet pipe with a 20" orifice plate.

Step 4: Determine minimum box dimensions (i.e., weir length) to assure control of pipe inlet.

$L = Q_{weir}/(CH^{3/2})$
C = 3.4 from Table 1401
Include a 50% clogging factor, which will double the required weir length
$L = 18.1/(3.4(.85)^{3/2})$
L = 6.79 feet - Required Length = 6.79(2) = 13.58'

Table 1401

Weir Flow Coefficients

Shape	Coefficient	Comments	Schematic
Sharp Crested	- (H in feet)		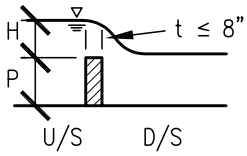
Projection Ratio (H/P = 0.4)	3.4	H < 1.0	
Projection Ratio (H/P = 2.0)	4.0	H > 1.0	
Broad Crested			
W/Sharp U/S Corner	2.6	Minimum Value	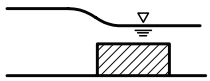
W/Rounded U/S Corner	3.1	Critical Depth	
Triangular Section			
A) Vertical U/S Slope			
1:1 D/S Slope	3.8	H > 0.7	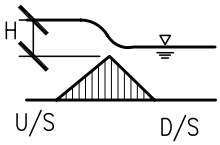
4:1 D/S Slope	3.2	H > 0.7	
10:1 D/S Slope	2.9	H > 0.7	
B) 1:1 U/S Slope			
1.1 D/S Slope	3.8	H > 0.5	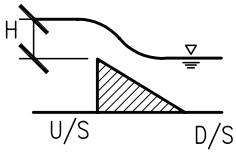
3:1 D/S Slope	3.5	H > 0.5	
Trapezoidal Section			
1:1 U/S Slope, 2:1 D/S Slope	3.4	H > 1.0	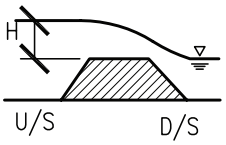
2:1 U/S Slope, 2:1 D/S Slope	3.4	H > 1.0	
Road Crossings			
Gravel	3.0	H > 1.0	
Paved	3.1	H > 1.0	

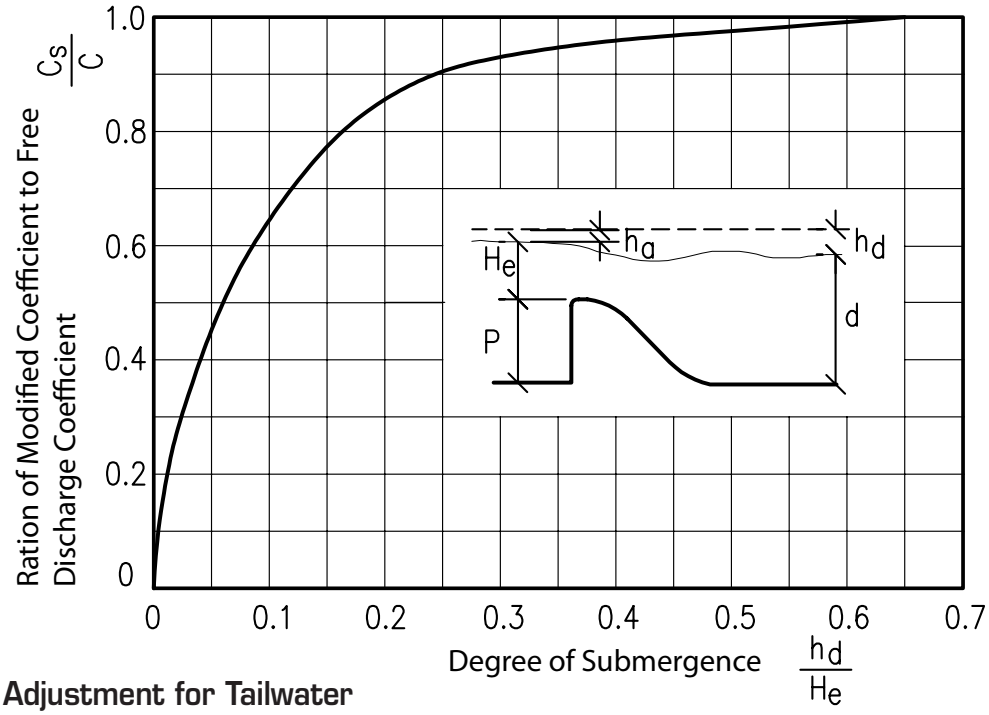

Reference: King & Brater, Handbook of Hydraulics, *McGraw Hill Book Company, 1963* – Design of Small Dams, *Bureau of Reclamation, 1977*

Adjustment for Tailwater

Figure 1401

Detention Pond Outlet Configurations

For small sites <5 acres

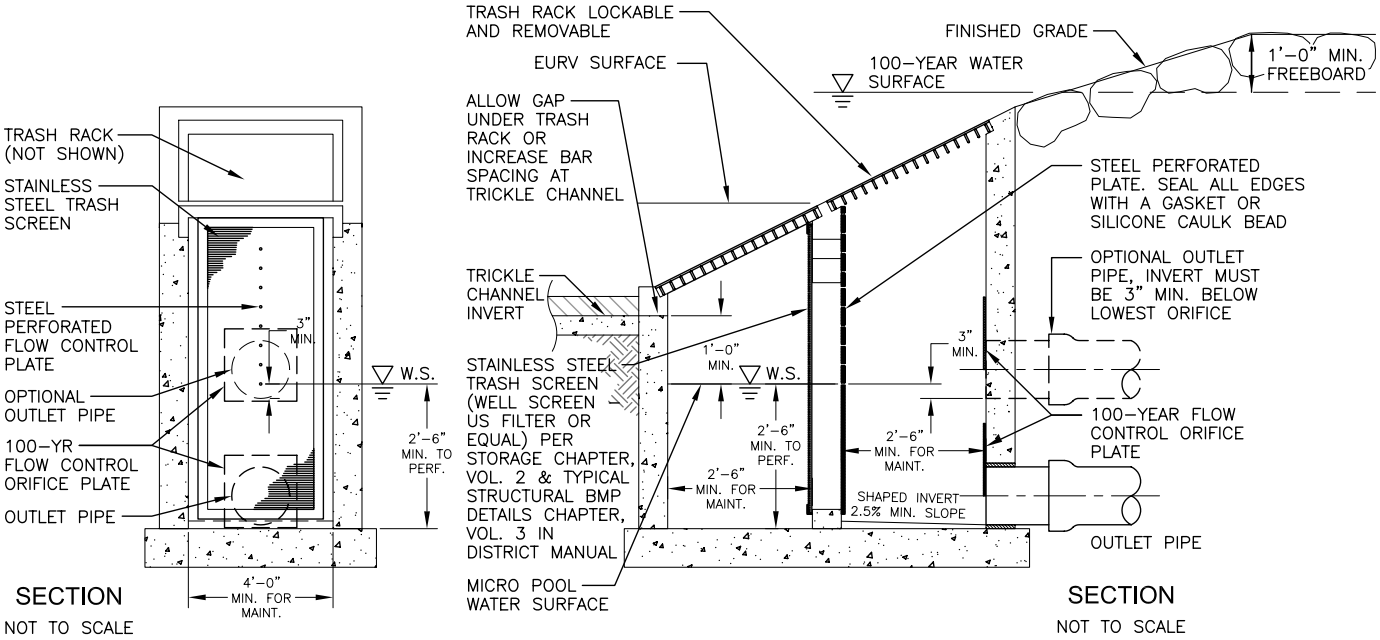

Adopted from the City and County of Denver Storm Drainage Criteria

Figure 1402

Detention Pond Details

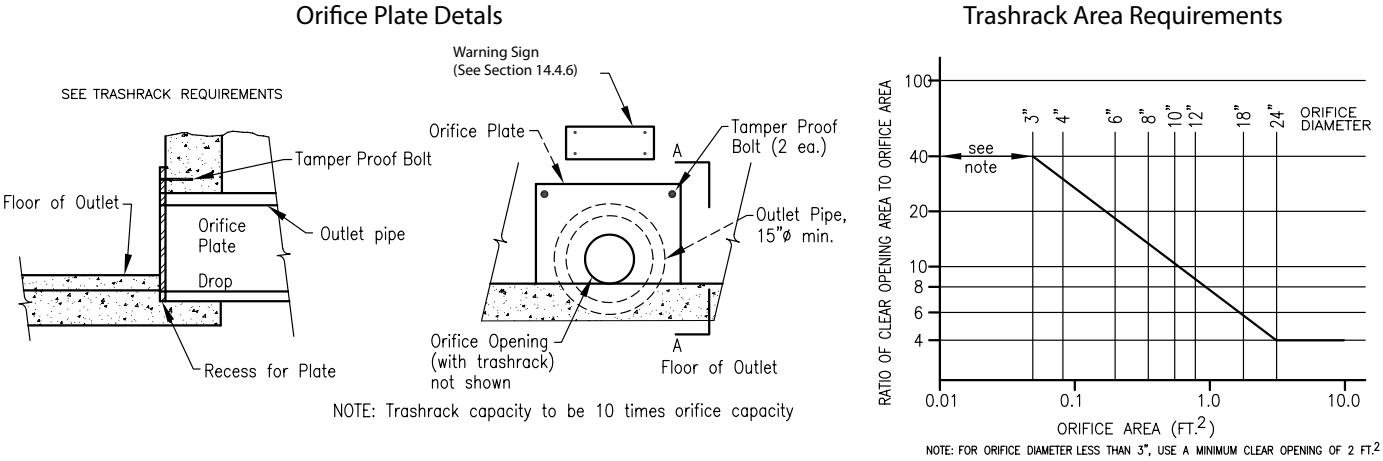

Figure 1403
Weir Design Example

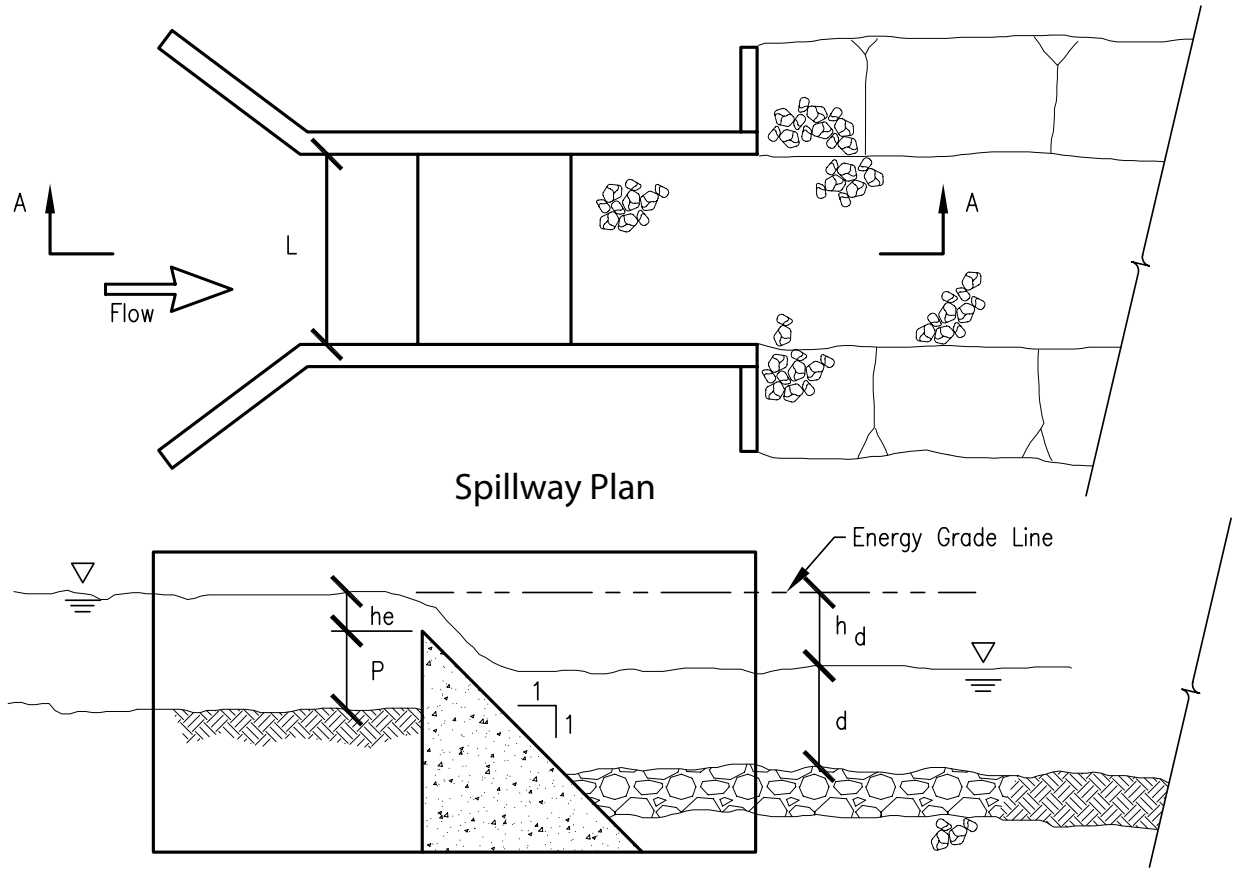

GIVEN: Q = 100 CFS, Triangular weir with vertical face, and 1:1 downstream slope, p = 2', h_e = 2', tailwater depth = 4.5', h_d = 1.5

FIND: L, and check submergence

Solution: $L_w = Q/CH^{3/2} = (100)/(3.8)/(2)^{3/2} = 9.3$ FT.

Submergence check

$\frac{h_d}{h_e} = \frac{1.5}{2.0} = 0.75$, then from Table 1401, $C_s/C = 1.0$, therefore no submergence adjustment is required.

Figure 1404

Outlet Design Example

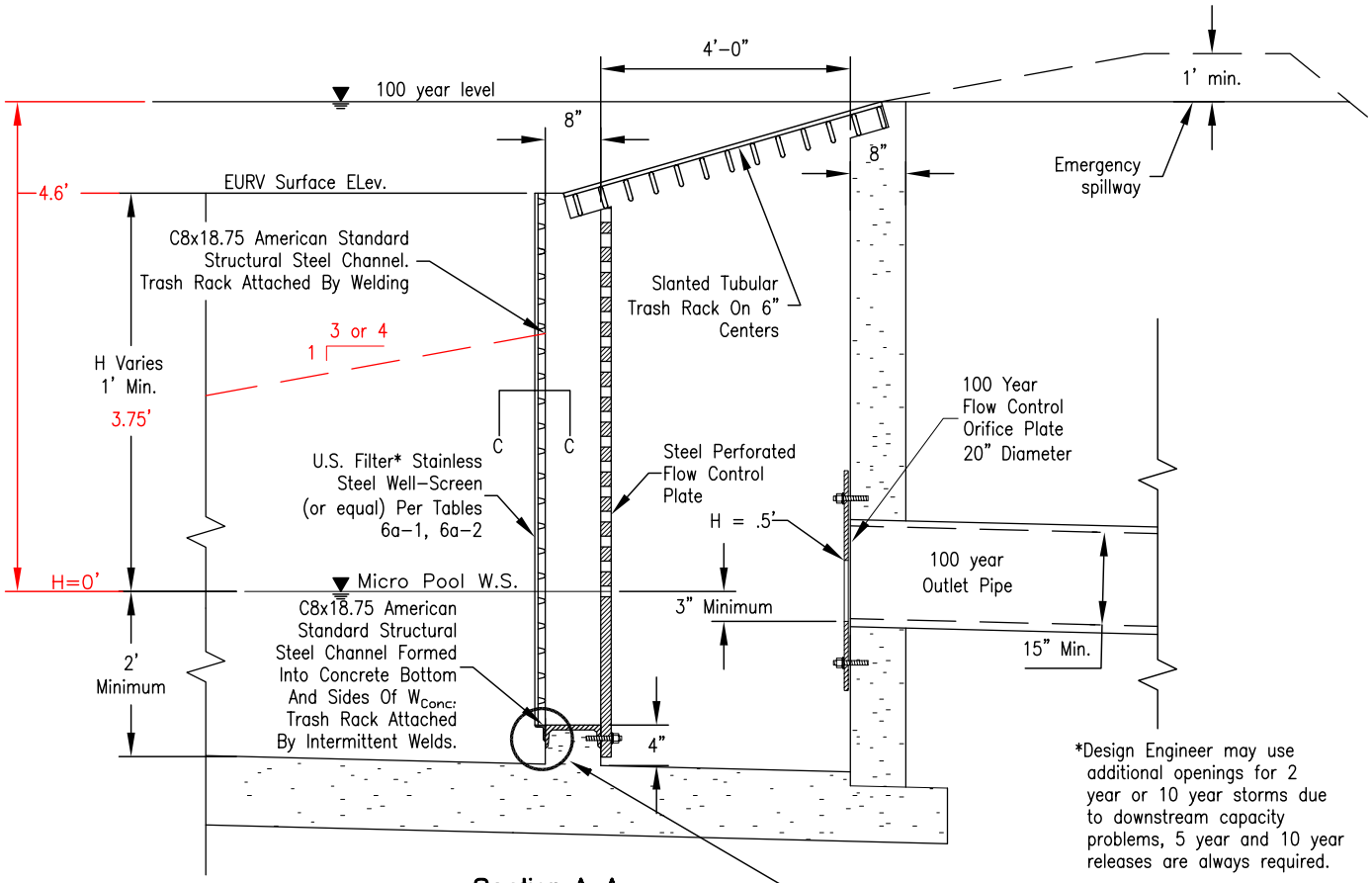

Section A-A

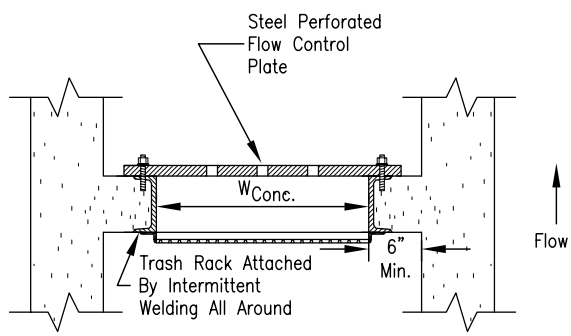

Section B-B – Plan View

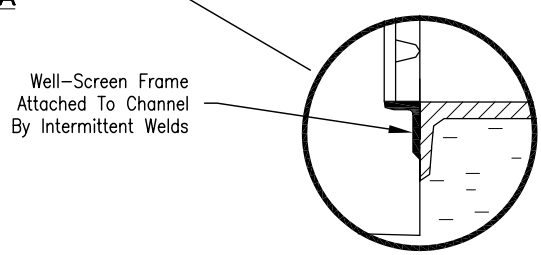

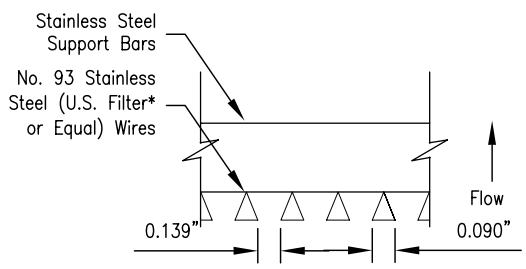

Section C-C

Limits for this Standardized Design:

1. All outlet plate openings are circular.
2. Maximum diameter of opening = 2 inches.

*U.S. Filter, St. Paul, Minnesota, USA

* Recommended only for Ponds with a large tributary area

R Value = (net open area)/(gross rack area) = 0.60

Red indicates design example

Reference: Urban Drainage and Flood Control District Drainage Criteria

Figure 1405

Underground Detention

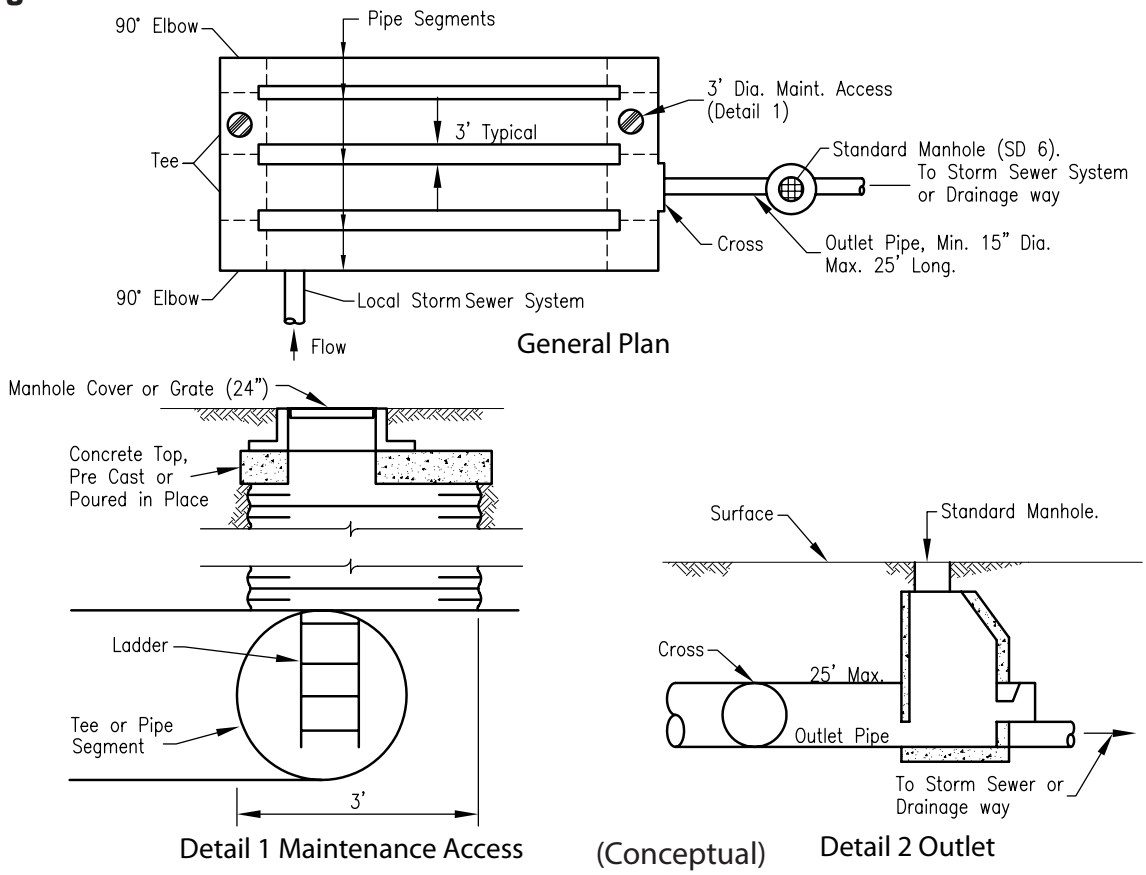

Figure 1406

Pond Forebay With Dissipator

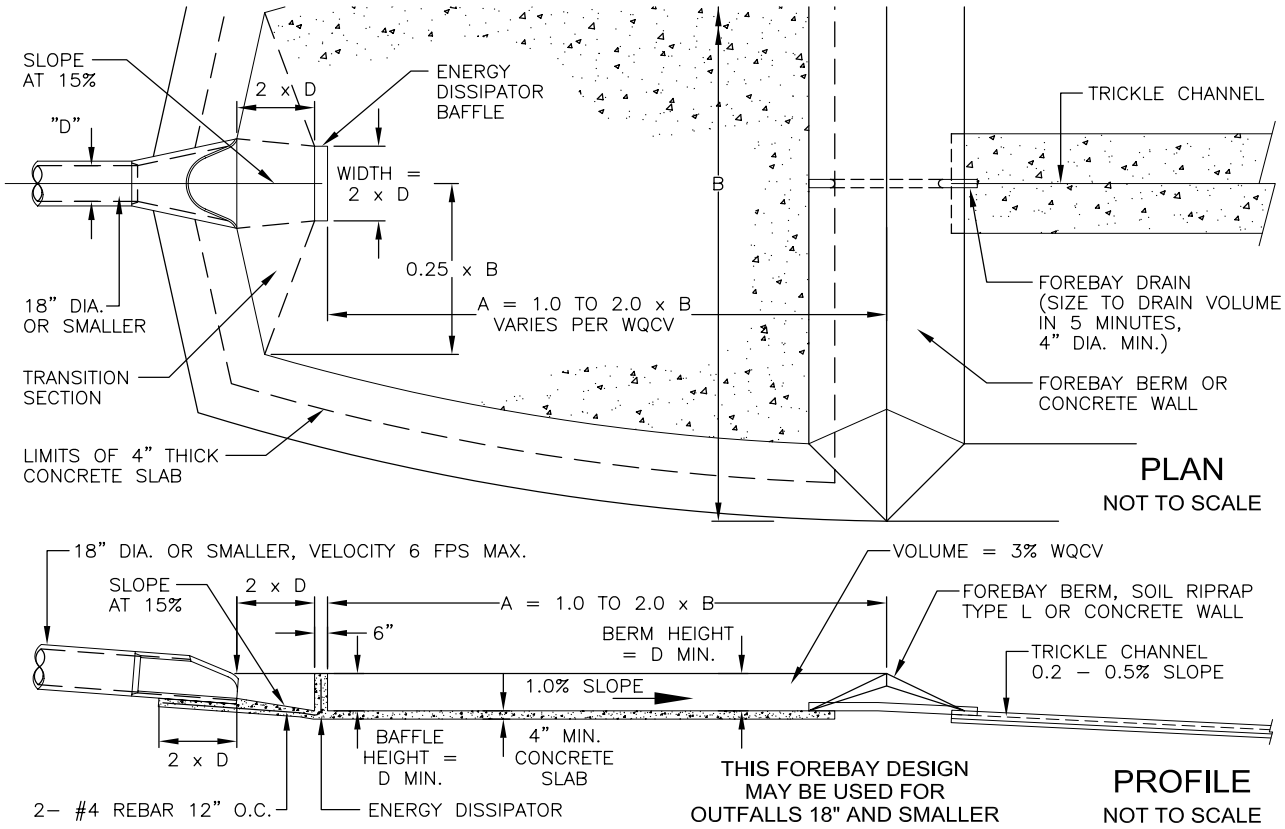

Adopted from the City and County of Denver Storm Drainage Criteria

Figure 1407

Embankment Protection Details And Rock Sizing Chart

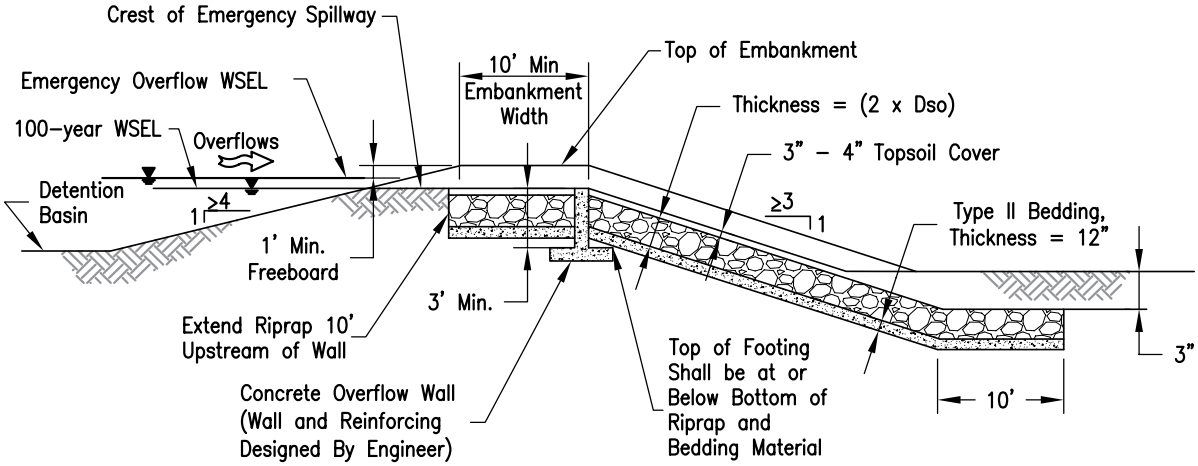

Emergency Spillway Profile

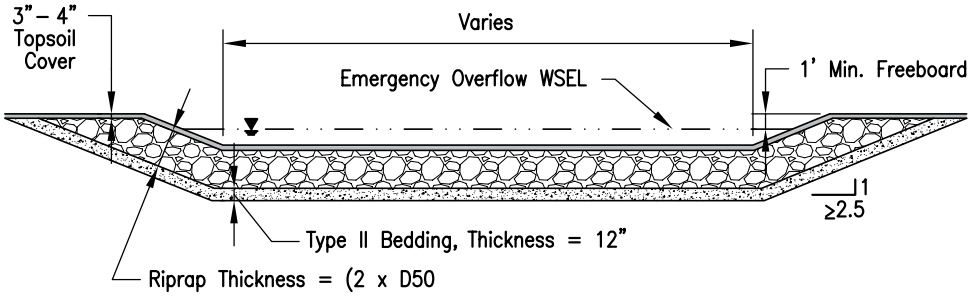

Spillway Channel at Crest and Downstream Side of Embankment

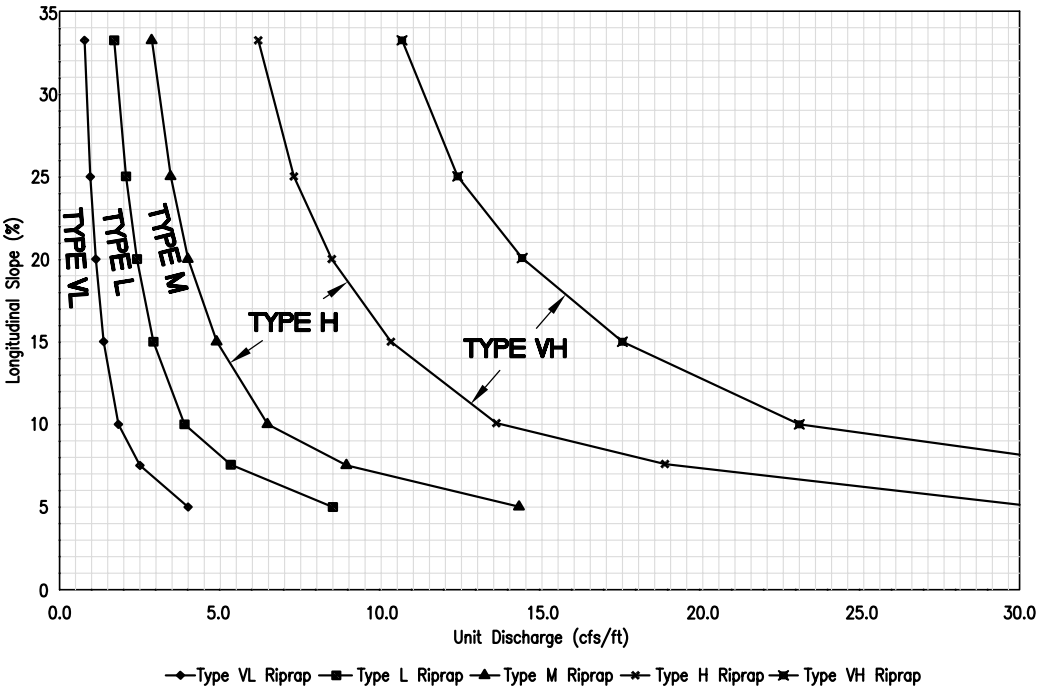

Reference: Douglas County Drainage Criteria

Figure 1408
Mountain Porous Landscape Design

NOTES:

1. Volume of Mountain Porous Landscape Design pond (MPLD): 100 year plus full water quality volume.
2. NRCS Hydrologic Soil Group:

a.) Type A and B - No percolation test required.

b.) Type C - Provide percolation test data for each proposed MPLD. Perform percolation test at bottom elevation of proposed MPLD. Provide soil classification analysis.

c.) Type D - MPLD not allowed.

3. Provide verification that there are at least 4-feet of suitable material below the bottom of the proposed MPLD to allow for sufficient infiltration. Maximum drain time is 72 hours.
4. Maximum depth of MPLD: 5-feet including 1-foot of freeboard.
5. Maximum internal and external slopes: 2: 1 (H: V). Provide up-slopejin-flow erosion control measures. Rolled erosion control products are required for slopes exceeding 3: 1.
6. Minimum pond bottom width: 2-feet.
7. Minimum top of berm width: 1-foot.
8. Elevation of top of berm shall be with in 0.10 of a foot.
9. Overflow slope rip-rap: Type L minimum 12-inch minus. Verify with rip-rap calculations.
10. If the existing slope exceeds 30%, provide detail for key-in into native material. Based on site conditions, a slope stability analysis may be required.
11. The design engineer shall perform an open-hole inspection at time of excavation to verify soil conditions. The design engineer shall certify the volume of the MPLD with as-built drawings.
12. The MPLD shall be maintained by the property owner.

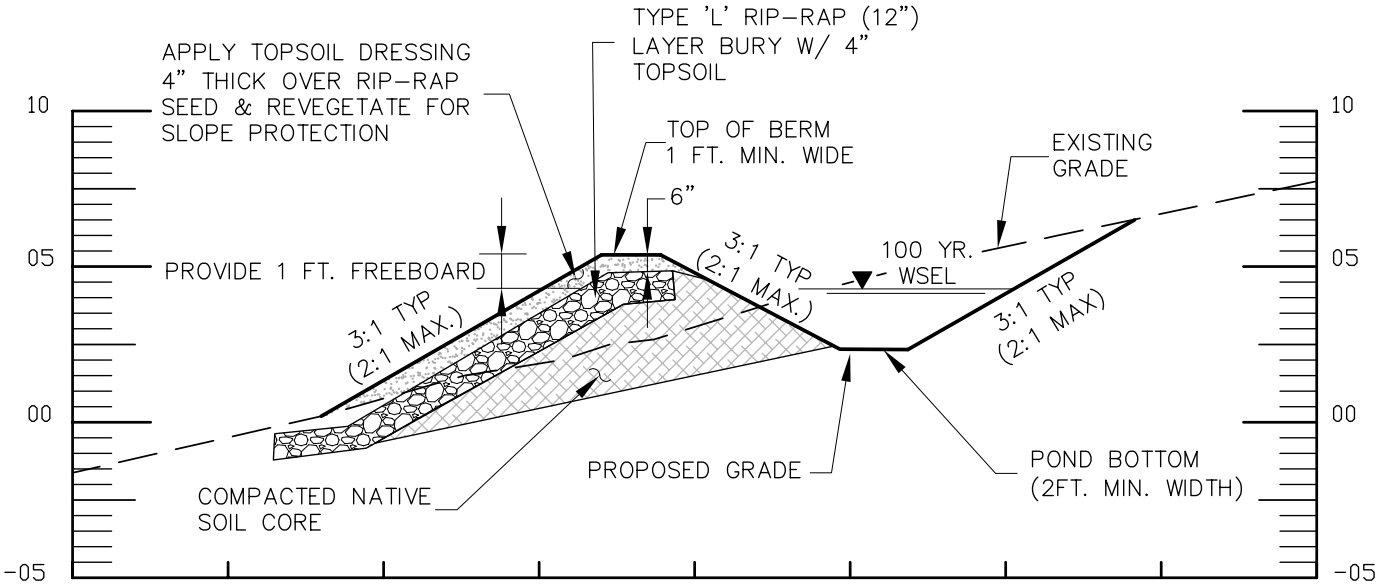

Appendix

Detention Facility Construction Drawing Checklist

General

- ❑ Overall plan view of Detention Basin
- ❑ Pond profile(s)
- ❑ Enlarged plan view of forebay(s) and construction details
- ❑ Enlarged plan view of micropool(s) and construction details
- ❑ Outlet structure construction details
- ❑ Construction details of other features and components

Overall Detention Plan View Details

- ❑ Prepare at a maximum scale of 1″ =50′
- ❑ Proposed contours with contour labels and slope labels
- ❑ Existing contours with contour labels
- ❑ Show location and label forebay(s)
- ❑ Show location and label micropool
- ❑ Show location and label outlet structure
- ❑ Show location and label emergency overflow spillway
- ❑ Show location and label inflow pipe(s)
- ❑ Show location of stormwater management facility sign(s)
- ❑ Show location and label concrete trickle/low flow channel(s)
- ❑ Show location of riprap outlet protection
- ❑ Show location and label access/maintenance road(s) or ramps
- ❑ Show EURV water surface limits
- ❑ Show 100-year water surface elevation
- ❑ Existing and proposed utilities within or adjacent to Detention Basin
- ❑ Property/Tract boundaries
- ❑ Existing and proposed easements
- ❑ Label all proposed walls and provide spot elevations at top and bottom of wall

Detention Basin Profile(s)

- ❑ Low flow/trickle channel profile from inlet(s) to outlet structure
- ❑ Invert elevations, longitudinal grades along flow path
- ❑ Profile through outlet structure and outlet pipe (provide pipe sizes, length, slope and hydraulic grade line)
- ❑ Invert elevations and longitudinal slopes of outlet structure features
- ❑ Invert elevations and longitudinal slopes of outfall pipe
- ❑ EURV water surface elevation
- ❑ 100-year water surface elevation
- ❑ Micropool depths and elevations
- ❑ Emergency overflow spillway elevation (with top of bank elevations)
- ❑ Energy dissipation/rip rap protection at pond outlet
- ❑ Energy dissipation/rip rap protection at emergency overflow spillway

Enlarged plan view of forebay(s) and construction details (See Figure 1406)

- ❑ Prepare at a maximum scale of 1" = 20'
- ❑ Enlarged plan view with dimensions and spot elevations, slope of bottom
- ❑ Cross section of concrete lined forebay with concrete slopes or 6" curb sides
- ❑ Structural/reinforcing details
- ❑ Energy dissipation structure details
- ❑ Drain pipe or weir detail
- ❑ Overflow protection, rip rap size, depth, dimension and location
- ❑ Maintenance access to forebay

Enlarged plan view of micropool and construction details

- ❑ Prepare at a maximum scale of 1" = 20'
- ❑ Enlarged plan view with dimensions, depths and spot elevations
- ❑ Cross section of concrete lined or grouted boulder micropool
- ❑ Permanent pool water surface elevation
- ❑ Floor elevation
- ❑ Details of low flow/trickle channel connection to micropool
- ❑ Details of connection to or interface with outlet structure
- ❑ Details for safety ramp/improvements

Outlet structure construction details

- ❑ Enlarged view with dimensions, depths and spot elevations
- ❑ Enlarged plan view to show proposed detailed grading/spot elevations around structure
- ❑ Cross sections, as required, to show depths, concrete thicknesses, EURV, 100-year and other appropriate water surface elevations, etc.
- ❑ Water quality outlet plate details and material specifications (plate dimensions, perforation size, number of row and a number of columns)
- ❑ Water quality outlet plate anchoring detail
- ❑ Overflow grate dimensions, material, type, opening size, anchoring detail
- ❑ Well screen/trash rack dimensions, material, type, opening size, anchoring detail
- ❑ Wingwall layout and structural reinforcing details

Construction details of other features and components

- ❑ Cross section of access/maintenance road(s) or ramps with all weather surface treatment (specify material type, thickness, slope and width)
- ❑ Emergency overflow spillway profile and cross section (weir elevation, weir length, riprap size, depth, dimensions, bedding material)
- ❑ Construction details for stormwater management facility signs
- ❑ Low flow/trickle channel construction details (cross section, material specification, slope)

Standard Form SF-1

Time of Concentration

Subdivision _____

Calculated By _____ **Date** _____

Sub-Basin Data			Initial/Overland Time (τ_i)			Travel Time (τ_t)				t_c Check (Urbanized Basins)		Final t_c	Remarks
Desig: (1)	C_5 (2)	Area Ac (3)	Length Ft (4)	Slope % (5)	τ_i Min. (6)	Length Ft. (7)	Slope % (8)	Vel. Fps (9)	τ_t Min. (10)	Total Length Ft (11)	t_c (L/180)+10 Min. (12)	Min. (13)	

$t_c = t_i + t_t$

Standard Form SF-2

Storm Drainage System Design (Rational Method Procedure)

Calculated By:		**Job #:**	
Date:		**Project:**	
Checked By:		**Design Storm:**	

Street	Design Point	Direct Runoff							Total Runoff				Street		Pipe			Travel Time			Remarks
		Area Design	Area (ac)	Runoff Coefficient	t_c (min)	C A (ac)	I in/hr	Q (cfs)	t_c (min)	Σ (C A) (ac)	I in/h	Q (cfs)	Slope (%)	Street Flow (cfs)	Design Flow (cfs)	Slope (%)	Pipe Size	Length (ft)	Velocity (fps)	T_t (min)	

Standard Form SF-3

Culvert Rating

Project: _____ **Location:** _____ **Station:** _____

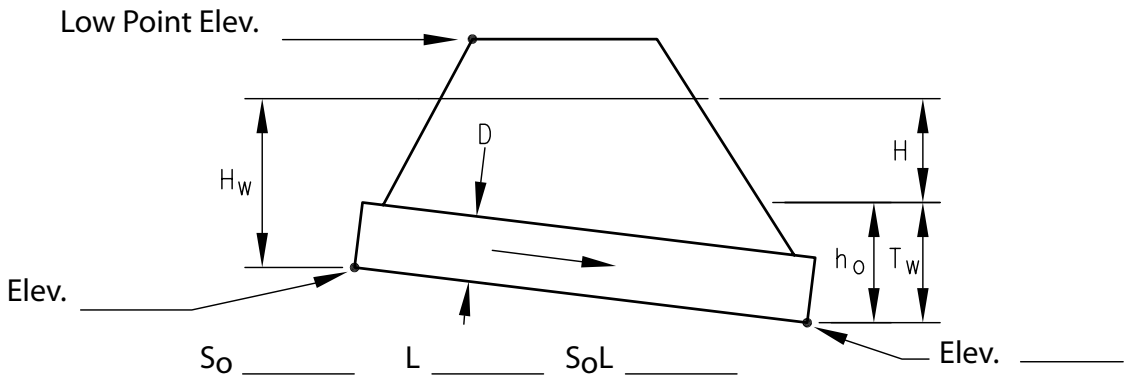

Culvert Data

Type: _____ n: _____

Inlet _____ Q_{Full}: _____

K_e _____ K_{Full}: _____

Outlet Control Equations

1. $H_w = H + h_o - LS_o$
2. For $T_w < D_i$ $h_o = \frac{d_c + D}{2}$ or T_w (whichever is greater)
3. For box culvert: $d = 0.315(Q/B)^{2/3} \leq D$

Q	Inlet Control		Outlet Control						Cont.	Control	Elev.
					$T_o < D$		$T_o > D$				
	H_c D	H_w	H	T_w	D_c	$\frac{D_c + D}{2} = h_o$	H_o	H_w	H_w		

Outlet Velocity, V = Q/A = 170 cfs/12.8 ft.^{2} = 13.5 fps

Notes:

(1) Culvert capacity
(2) Road overtopping
(3) Example only

Standard Details

Standard Detail 1-1
Curb Inlet Type R

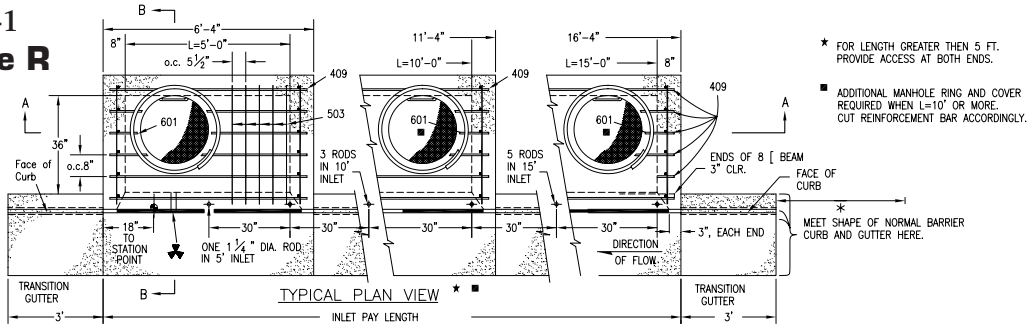

TYPICAL PLAN VIEW ★ ■

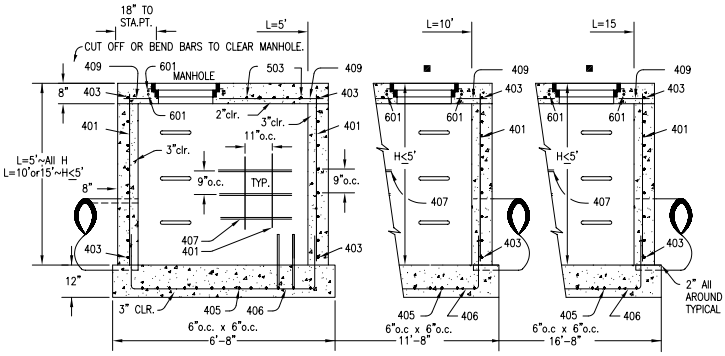

SECTION A–A REGULAR INLET

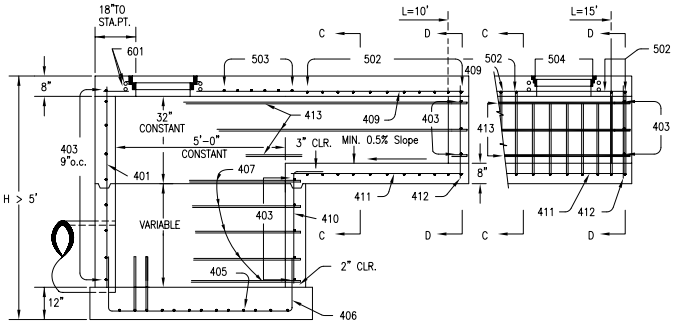

SECTION A–A INLET WITH DROP BOX~H>5'

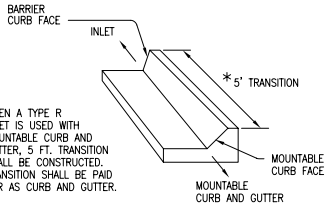

★ WHEN A TYPE R INLET IS USED WITH MOUNTABLE CURB AND GUTTER, 5 FT. TRANSITION SHALL BE CONSTRUCTED. TRANSITION SHALL BE PAID FOR AS CURB AND GUTTER.

TRANSITION CURB

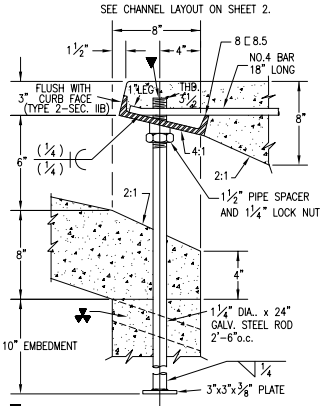

▼ CURB FACE ASSEMBLY

PLACE ENTIRE ASSEMBLY BEFORE POURING CONCRETE.

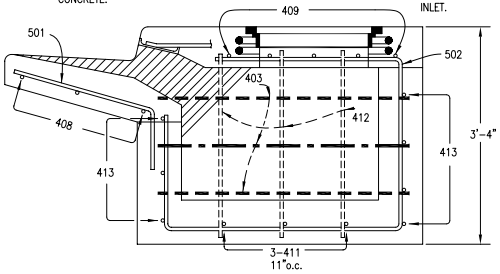

SECTIONS C–C & D–D

(DOTTED BARS ARE IN SECTION D–D)

▲ – FOR A 1'-0" PAN SLOPE 2" PER FT.

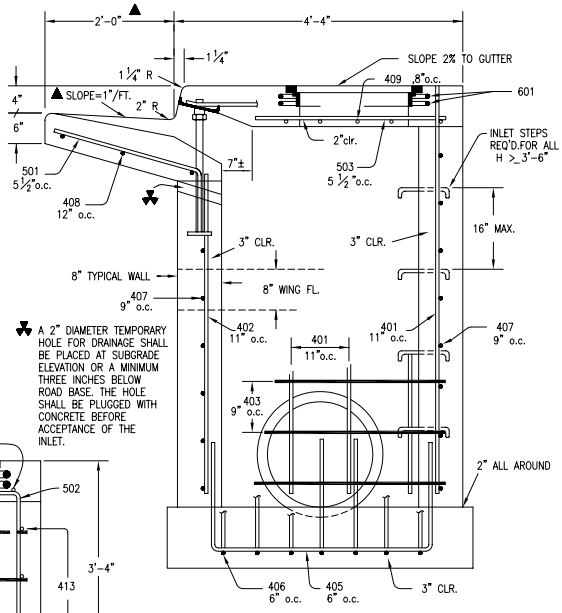

▼ A 2" DIAMETER TEMPORARY HOLE FOR DRAINAGE SHALL BE PLACED AT SUBGRADE ELEVATION OR A MINIMUM THREE INCHES BELOW ROAD BASE. THE HOLE SHALL BE PLUGGED WITH CONCRETE BEFORE ACCEPTANCE OF THE INLET.

SECTION B–B
TYPICAL END VIEW

NOTE: MANHOLE RING & COVER, STATION POINT AND OUTFLOW PIPE SHALL BE LOCATED AT THE SAME END OF THE INLET.

Standard Detail 1-2
Curb Inlet Type R

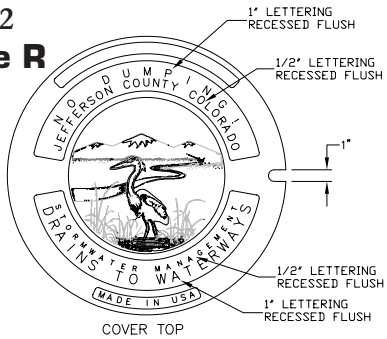

COVER TOP

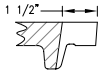

PICKHOLE DETAIL

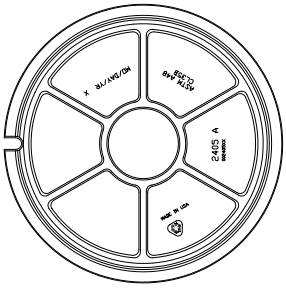

COVER BOTTOM

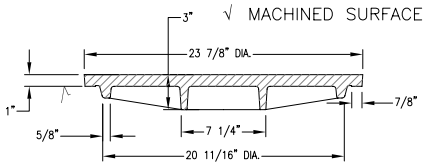

SECTION

GENERAL NOTES

1. All concrete shall be class b.
2. Concrete walls shall be formed on both sides and shall be 8 in. Thick.
3. Inlet steps shall be in accordance with AASHTO m 199.
4. Curb face assembly shall be galvanized after welding.
5. Exposed concrete corners shall be chamfered 3/4 in. Curb and gutter corners shall be finished to match the existing curb and gutter beyond the transition gutter.
6. Reinforcing bars shall be deformed and shall have a 2 in. minimum clearance. All reinforcing bars shall be epoxy coated.
7. Dimensions and weights of typical manhole ring and cover are nominal
8. Material for manhole rings and covers shall be gray or ductile cast iron conforming to 712.06.
9. Since pipe entries into the inlet are variable, the dimensions shown are typical. Actual dimensions and quantities for concrete and reinforcement shall be as required in the work. Quantities include volumes occupied by pipes.
10. Structural steel shall be galvanized and shall conform to the requirements of 712.06.

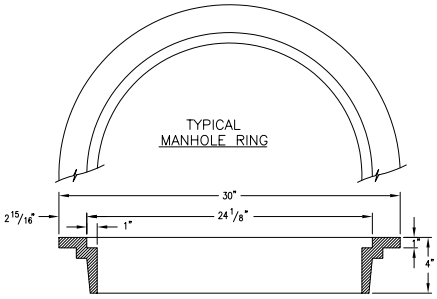

WEIGHTS: COVER = 125 LBS.
RING = 135 LBS.
TOTAL = 260LBS.

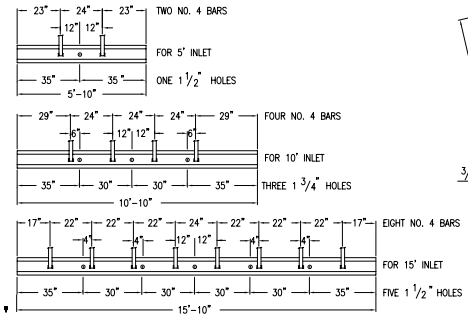

CHANNEL LAYOUT DETAILS

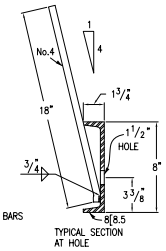

TYPICAL SECTION AT HOLE

TABLE ONE ~ BAR LIST FOR CURB INLETS, TYPE "R"

MARK	DIA IN.	O.C. SPACING	TYPE	ALL INLETS L= 5' NO.REQ'D.	ALL INLETS L= 5' LENGTH	INLETS. H ≤ 5' 10' NO.REQ'D.	INLETS. H ≤ 5' 10' LENGTH	INLETS. H ≤ 5' 15' NO.REQ'D.	INLETS. H ≤ 5' 15' LENGTH	INLETS. H > 5' 10' NO.REQ'D.	INLETS. H > 5' 10' LENGTH	INLETS. H > 5' 15' NO.REQ'D.	INLETS. H > 5' 15' LENGTH
401	1/2"	11"	II	15	*	21	*	26	*	11	*	11	*
402		11"	II	7	*	13	*	18	*	7	*	7	*
403		9 "	II	*	4'-10"	*	4'-0"	*	4'-0"	*	4'-0"	*	4'-10"
405		6 "	VI	11	6'-10"	21	6'-10"	31	6'-10"	11	6'-10"	11	6'-10
406		6 "	VIII	7	8'-10"	7	13'-10"	7	18'-10"	7	8'-10"	7	8'-10"
407		9 "	II	*	5'-10"	*	10'-10	*	15'-10"	*	5'-10"	*	5'-10"
408		12"	II	3	6'-10"	3	11'-0"	3	16'-0"	3	11'-0"	3	16'-0"
409		8 "	II	6	5'-10"	6	10'-10"	6	15'-10"	6	10'-10"	6	15'-10"
410		11"	VII							3	*	3	*
411		11"	II							3	5'-2"	3	10'-2"
412		11"	II							3	2'-9"	3	2'-9"
413		9 "	II							7	10'-10"	7	15'-10"
501	5/8"	5 1/2"	IV	11	3'-4"	22	3'-4"	33	3'-4"	22	3'-4"	33	3'-4"
502		5 1/2"	III							11	11'-5"	17	11'-5"
503		5 1/2"	II	5	3'-6"	16	3'-6"	27	3'-6"	6	3'-6"	6	3'-6"
504		5 1/2"	IX									5	8'-4"
601	3/4"	2 1/2"	V	2	8'-10"	2	8'-10"	2	8'-10"	2	8'-10"	4	8'-10"
ø8[8.5				1	5'-10"	1	10'-10"	1	15'-10"	1	10'-10"	1	15'-10"
				2BARS,1ROD	—	4BARS,3RODS	—	8BARS,5RODS	—	4BARS,3RODS	—	8BARS,5RODS	—

* VARIABLE. REFER TO TABLE TWO.
ø INCLUDE 18" NO. 4 BARS (SEE CHANNEL LAYOUT DETAIL).
♥ SEE CURB FACE ASSEMBLY ON SHEET 1 AND CHANNEL LAYOUT DETAILS ON THIS SHEET.

REGULAR INLETS — DROP BOX INLETS

TABLE TWO ~ BARS AND QUANTITIES VARIABLE WITH "H"

'H'	LENGTH 401	LENGTH 402	LENGTH 410	NO. REQ'D. REGULAR 403	NO. REQ'D. REGULAR 407	NO. REQ'D. DROP BOX 403	NO. REQ'D. DROP BOX 407	L=5' CU.YD.CONC.	L=5' LB.STEEL	L=10' CU.YD.CONC.	L=10' LB.STEEL	L=15' CU.YD.CONC.	L=15' LB.STEEL
3'-0"	2'-8"	1'-8"		10	7			3.2	285	5.3	497	7.4	706
3'-6"	3'-2"	2'-2"		10	7			3.4	305	5.7	528	7.9	747
4'-0"	3'-8"	2'-8"		12	9			3.7	326	6.0	559	8.4	786
4'-6"	4'-2"	3'-2"		12	9			3.9	334	6.4	571	8.8	803
5'-0"	4'-8"	3'-8"		14	11			4.1	354	6.7	602	9.3	844
5'-6"	5'-2"	4'-2"	3'-5"	16	13	15	6	4.4	375	6.0	607	7.4	850
6'-0"	5'-8"	4'-8"	3'-11"	16	13	16	6	4.6	382	6.2	616	7.6	860
6'-6"	6'-2"	5'-2"	4'-5"	18	15	18	8	4.8	402	6.4	637	7.8	880
7'-0"	6'-8"	5'-8"	4'-11"	20	17	19	10	5.0	423	6.6	654	8.0	897
7'-6"	7'-2"	6'-2"	5'-5"	20	17	20	10	5.3	430	6.9	664	8.3	907
8'-0"	7'-8"	6'-8"	5'-11"	22	19	22	12	5.5	451	7.1	684	8.5	927
8'-6"	8'-2"	7'-2"	6'-5"	24	21	23	14	5.7	471	7.3	702	8.7	944
9'-0"	8'-8"	7'-8"	6'-11"	24	21	24	14	6.0	479	7.6	711	9.0	954
9'-6"	9'-2"	8'-2"	7'-5"	26	23	26	16	6.2	499	7.8	732	9.2	974
10'-0"	9'-8"	8'-8"	7'-11"	28	25	27	18	6.4	520	8.0	749	9.4	992
10'-6"	10'-2"	9'-2"	8'-5"	28	25	28	18	6.7	527	8.3	759	9.7	1001
11'-0"	10'-8"	9'-8"	8'-11"	30	27	30	20	6.9	547	8.5	779	9.9	1022

NOTE: FOR L=5', L=10' AND L=15'
REGULAR INLETS: TOTAL QUANTITIES NEEDED ARE OUTSIDE OF THE HEAVY BLACK LINE.
DROP BOX INLETS: TOTAL QUANTITIES NEEDED ARE INSIDE OF THE HEAVY BLACK LINE

STEEL WEIGHTS DO NOT INCLUDE STRUCTURAL STEEL.

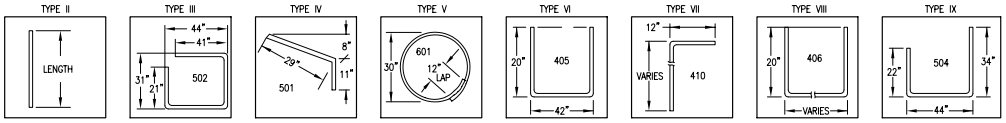

BAR BENDING DIAGRAMS ~ (Dimensions are Out-to-Out of bar)

Standard Detail 2-1

Combination Inlet Type 13 - (Single) Adjustable Curb Box

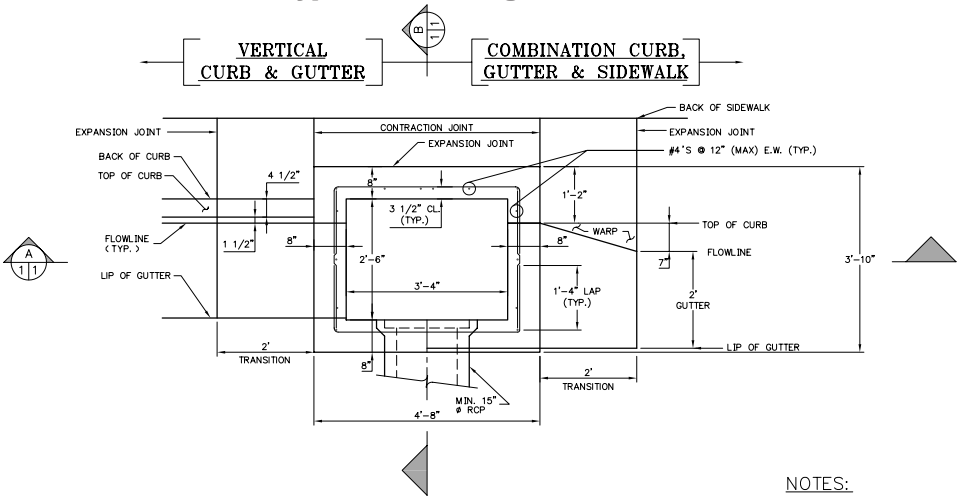

PLAN VIEW

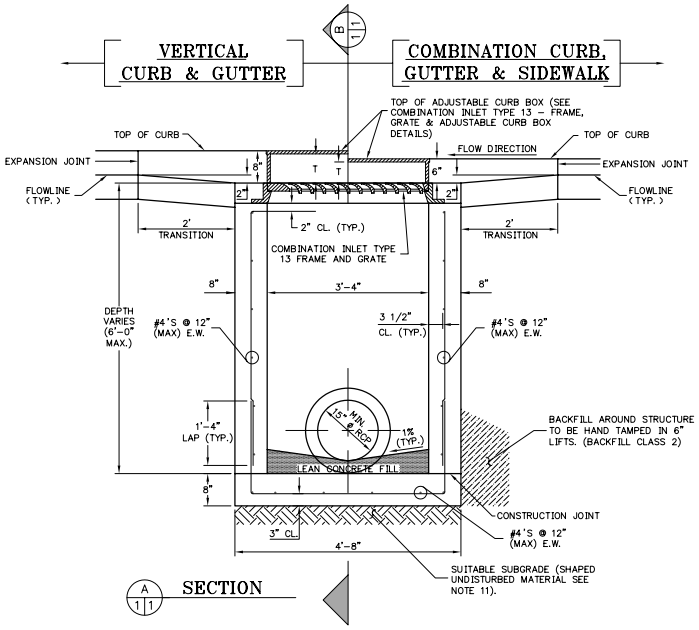

SECTION

NOTES:

1. FOR PAYMENT PURPOSES, INLET STRUCTURES SHALL ALSO INCLUDE 2'-0" CURB & GUTTER TRANSITION SECTION AT EACH END OF INLET PLUS SIDEWALK SECTIONS WHERE REQUIRED BEHIND INLET STRUCTURE AND TRANSITION SECTIONS.
2. FLOOR SLOPE MAY BE POURED MONOLITHIC WITH BASE.
3. S_c = SLOPE OF CONNECTOR = 1% MIN.
4. UNLESS OTHERWISE SPECIFIED ON THE DRAWINGS OR OTHERWISE APPROVED, ALL TYPE 13 INLETS SHALL BE CONSTRUCTED WITH AN ADJUSTABLE C.I. CURB BOX (SEE COMBINATION INLET TYPE 13 - FRAME, GRATE & ADJUSTABLE CURB BOX DETAILS).
5. DESIGN CONDITIONS FOR INLETS ALLOWS DEPTHS OF 6' (MAX.). FOR INLETS MORE THAN 6' IN DEPTH, SHOP DRAWINGS AND DESIGN ANALYSIS SHALL BE SUBMITTED FOR APPROVAL.
6. ALL REINFORCING STEEL SHALL BE GRADE 60 DEFORMED BARS. DIAMETER OF BEND MEASURED ON THE INSIDE OF THE BAR SHALL BE A MINIMUM OF 6 BAR DIAMETER.
7. ALL WORK SHALL CONFORM TO AASHTO 'STANDARD SPECIFICATIONS FOR HIGHWAY BRIDGES', SEVENTEENTH EDITION, 1999.
8. CONCRETE SHALL HAVE A 28 DAY COMPRESSIVE STRENGTH OF 4000 PSI.
9. SUB-GRADE SHALL BE A GRADATION EQUAL TO CLASS 2 BEDDING COMPACTED TO 95% MAXIMUM DRY DENSITY. AASHTO DESIGNATION T-180.
10. NO FORMWORK SHALL REMAIN INSIDE STRUCTURE WHEN COMPLETE.
11. SUB-GRADE SHALL BE SHAPED UNDISTURBED MATERIAL OR OVEREXCAVATED AND BACKFILLED WITH CLASS 2 BEDDING MATERIAL, COMPACTED PER SPECIFICATIONS.
12. SPLICING OF REINFORCING STEEL SHALL BE PERMITTED ONLY WHERE DETAILED IN DRAWINGS.
13. INLET WALLS SHALL BE FORMED BOTH INSIDE AND OUTSIDE. CASTING OF SIDEWALLS AGAINST EARTH IS NOT PERMITTED.
14. LEAN CONCRETE FILL TO BE f_c = 2000 PSI.

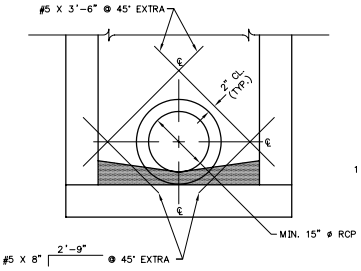

DETAIL REBAR PLACEMENT AROUND CONNECTOR

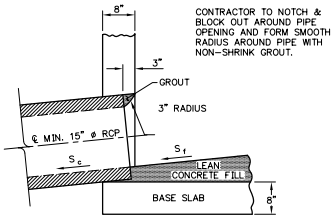

DETAIL CONNECTOR PIPE END TREATMENT (TYP.)
(OPTIONAL)

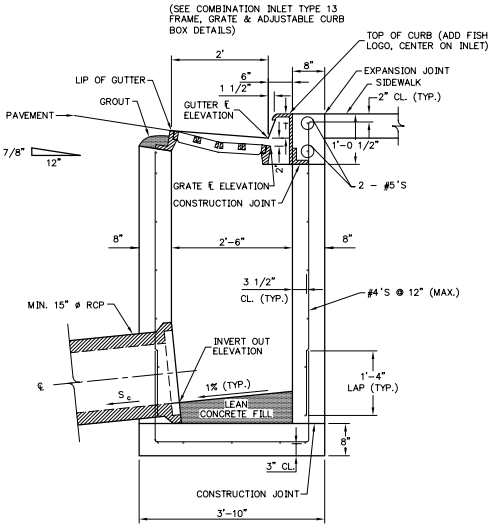

SECTION

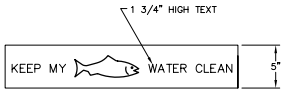

GROOVING FOR TEXT AND LOGO SHALL BE 1/8" DEPTH AND 1/8" WIDTH.

DETAIL FISH LOGO
NO SCALE

T = THROAT OPENING
T = 6" FOR 6" VERTICAL CURB & GUTTER
T = 5" FOR COMBINATION CURB GUTTER & SIDEWALK
DROP FROM GUTTER ℄ ELEVATION TO GRATE ℄ ELEVATION (TRANSITION) IS 2".

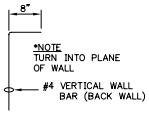

Standard Detail 2-2

Combination Inlet Type 13 - (Double) Adjustable Curb Box

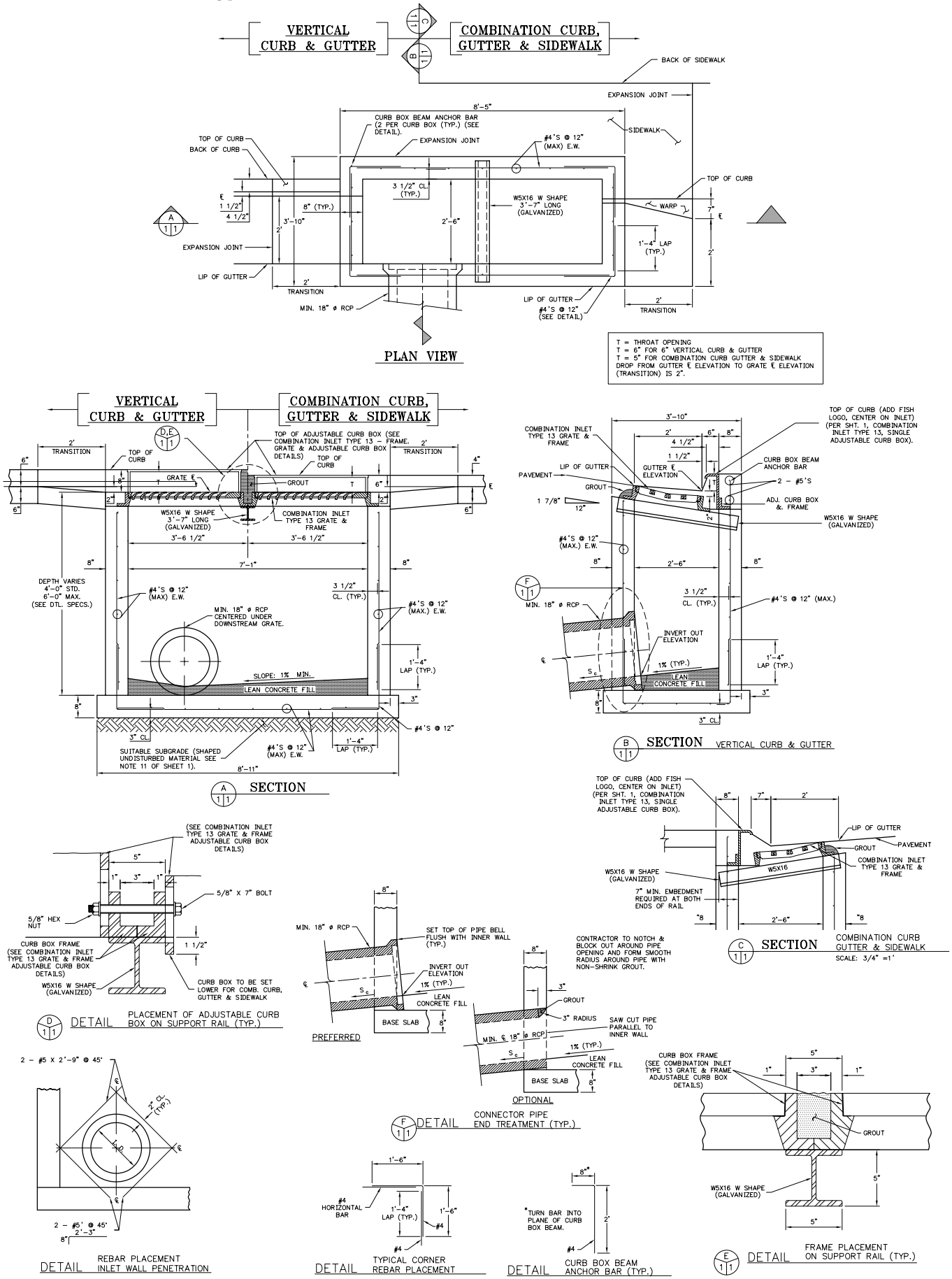

Standard Detail 2-3

Combination Inlet Type 13 - (Triple) Adjustable Curb Box

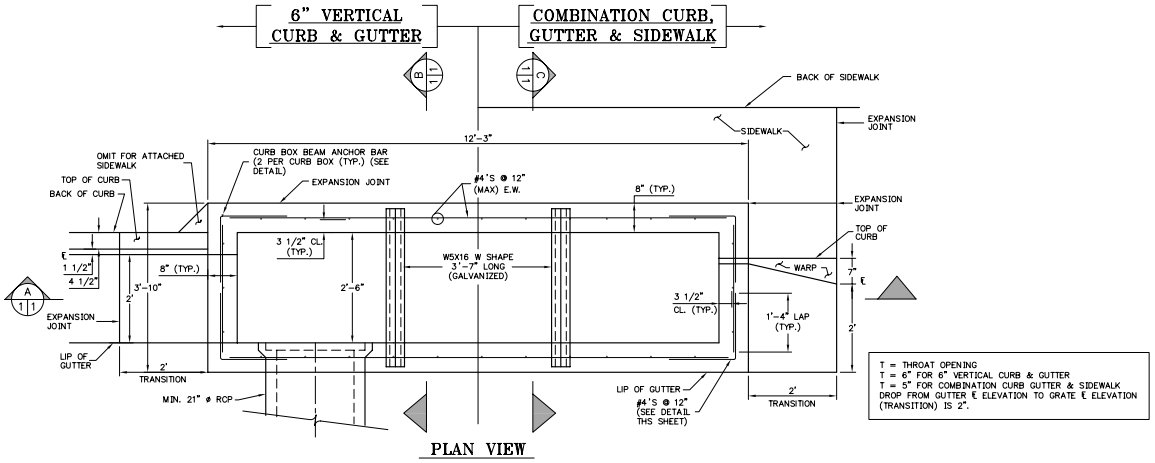

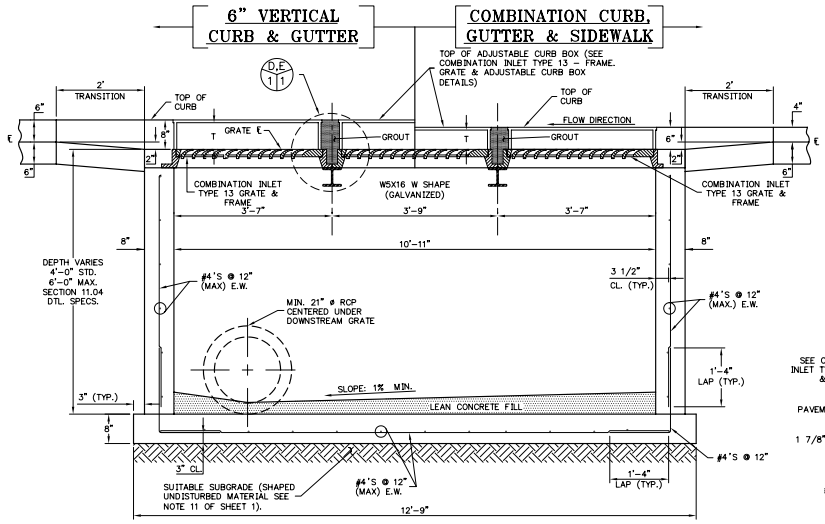

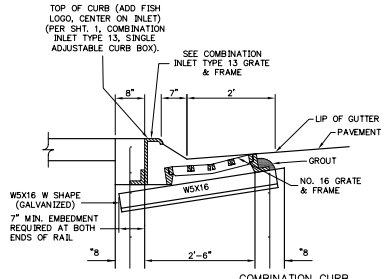

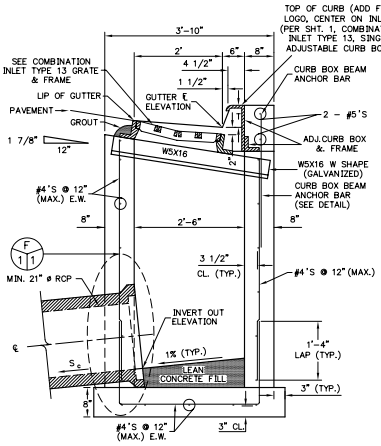

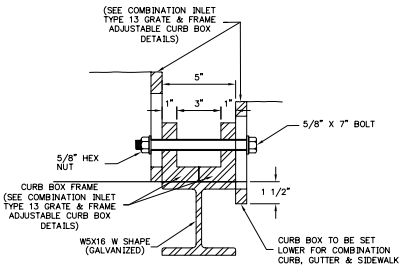

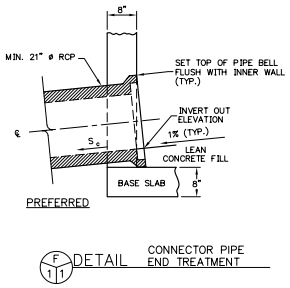

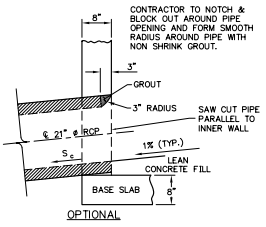

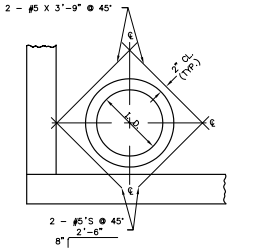

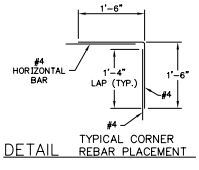

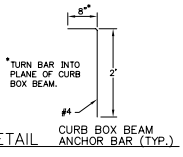

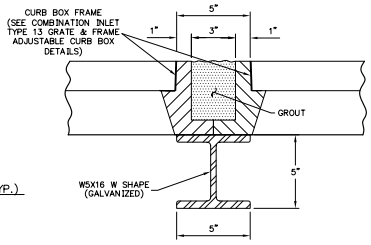

Standard Detail 2-4

Combination Inlet Type 13 - Frame & Grate Adjustable Curb Box

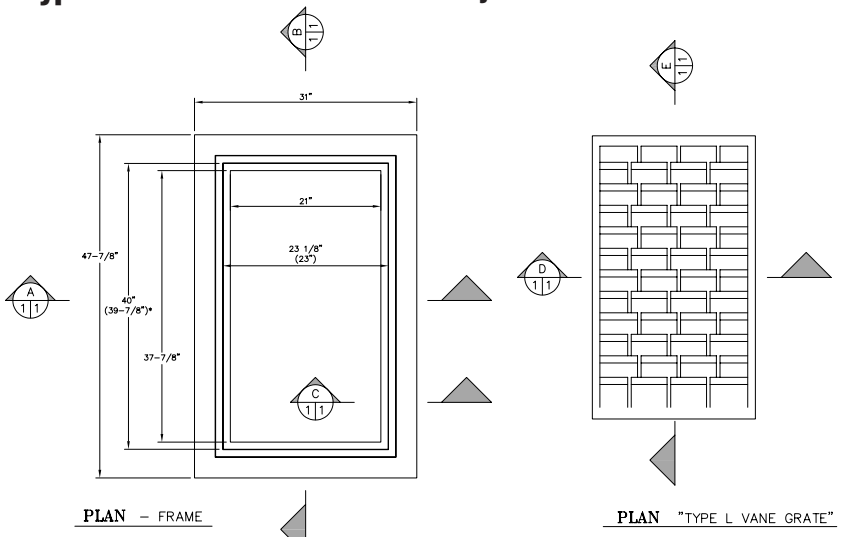

COMBINATION INLET TYPE 13
GRATE & FRAME

FIG. 1

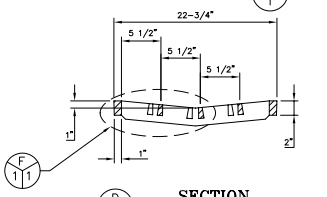

SECTION

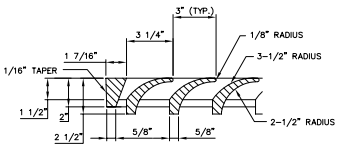

DETAIL

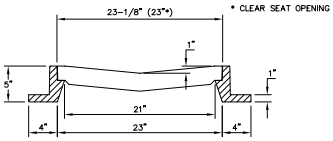

SECTION

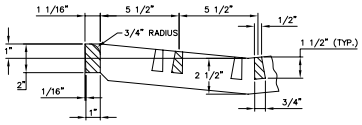

DETAIL

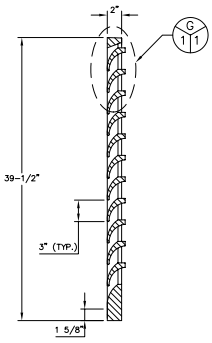

SECTION

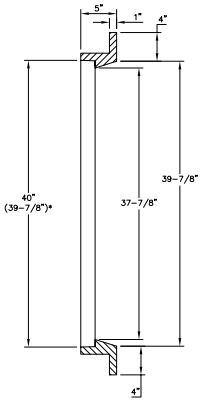

SECTION

GENERAL NOTES

1. CAST IRON SHALL CONFORM TO ASTM A48, (CLASS 35B MINIMUM)
2. CASTINGS SHALL COMPLY WITH FEDERAL SPECIFICATION RR-F-621D FOR CASTING PROOF LOADING (HEAVY DUTY).
3. ALL CASTINGS REQUIRE INDIVIDUAL APPROVAL/CERTIFICATION FROM JEFFERSON COUNTY PLANNING AND ZONING
4. CASTINGS SHALL NOT BE DIPPED OR PAINTED PRIOR TO FINAL INSPECTION, ONCE INDIVIDUAL CASTINGS ARE CHECKED, AND APPROVED BY THE DIVISION FOR PROJECT USAGE, THEY SHALL BE COATED WITH AN APPROVED MATERIAL.

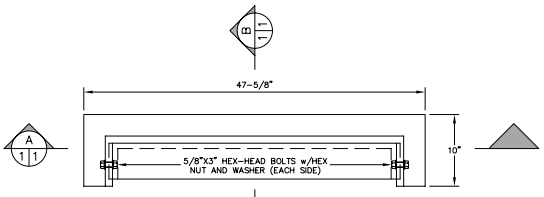

PLAN

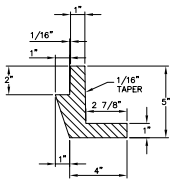

DETAIL

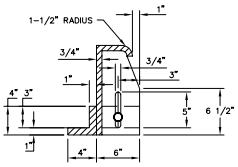

SECTION

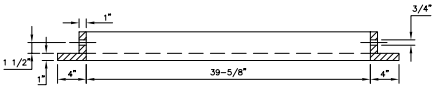

SECTION

FIG. 2 ADJUSTABLE CURB BOX
MINIMUM CURB OPENING AREA = 150IN ^{2}

Standard Detail 3
Median Inlet

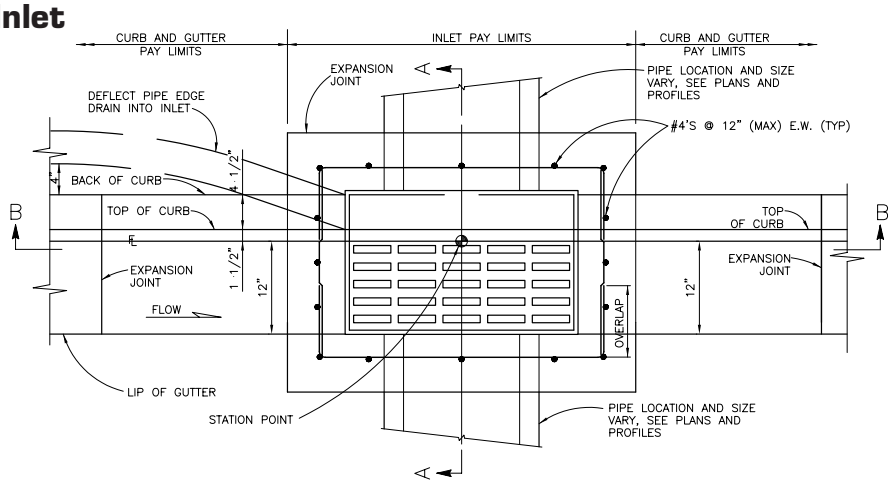

PLAN VIEW (SPECIAL 1)
SCALE: 3/4" = 1'-0"

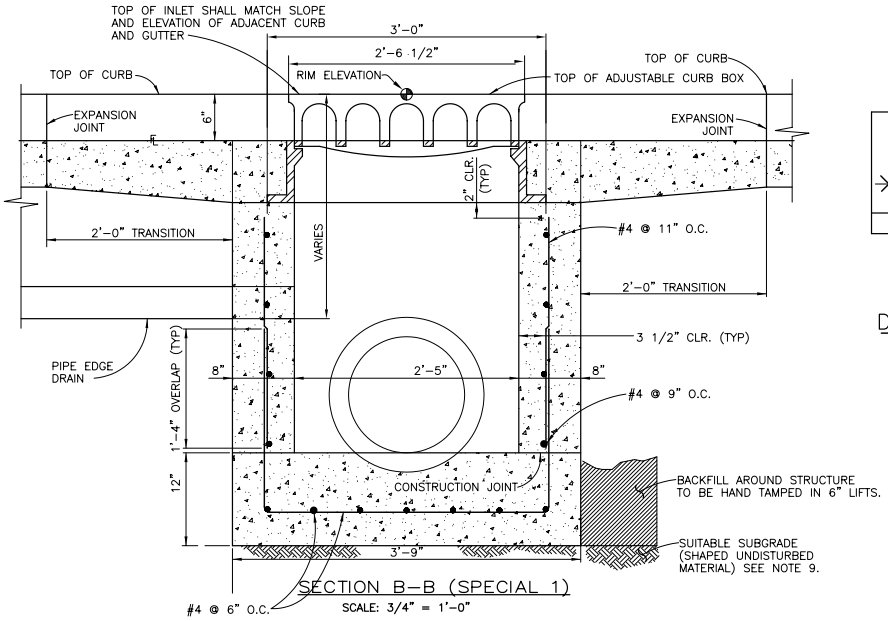

SECTION B–B (SPECIAL 1)
SCALE: 3/4" = 1'-0"

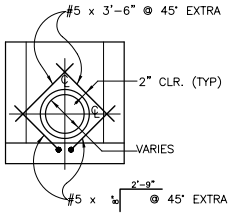

DETAIL REBAR PLACEMENT AROUND CONNECTOR PIPE
SCALE: 1/2" = 1'-0"

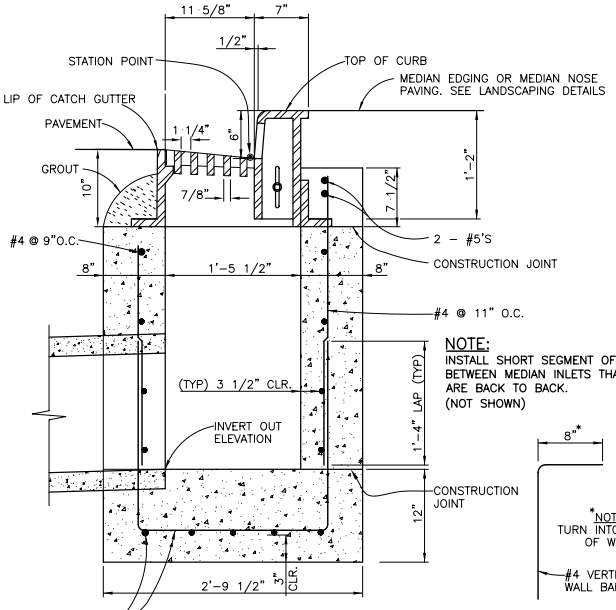

NOTE:
INSTALL SHORT SEGMENT OF PIPE BETWEEN MEDIAN INLETS THAT ARE BACK TO BACK. (NOT SHOWN)

SECTION A–A (SPECIAL 1)
SCALE: 3/4" = 1'-0"

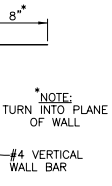

DETAIL VERT. WALL BAR BACK WALL (TYP)
NOT TO SCALE

NOTES

1) All casting shall conform to astm a-48(c1 35b) with a minimum strength of 35 ksi.
2) All castings shall be heavy duty, and capable of withstanding aashto H20 loading.
3) Floor slope may be poured monolithic with base.
4) All reinforcing steel shall be astm, A-615, grade 60 deformed bars. Diameter of bend measured on the inside of the bar shall be a minimum of 6 bar diameters.
5) All work shall be done in accordance with the standard specifications applicable to the project.
6) Concrete shall have a 28 day strength of 4000 PSI.
7) Subgrade shall have a gradation equal to class b bedding compacted to 100% maximum dry density, AASHTO T-99.
8) No formwork shall remain inside structure when complete.
9) Sub-grade shall be shaped undisturbed material or overexcavated and backfilled with 3/4" Crushed angular rock bedding material.
10) Inlet walls shall be formed both inside and outside. Casting of sidewalls against earth is not permitied.
11) Lean concrete fill to be f'_c = 2000 PSI.
12) Median inlet box wall angles vary from 90° in some cases. Engineer shall approve inlet box forms prior to placing concrete. Cost of work is included in median inlet pay item.